2026 ROOF REPLACEMENT PROJECTS

Lake Land College
West Building
Mattoon, IL 61938

Project No: 2026-010

October 19th, 2026

Owner:
Lake Land College
5001 Lake Land Blvd.
Mattoon, IL 61938

SECTION 00 0110 - TABLE OF CONTENTS PROCUREMENT

AND CONTRACTING REQUIREMENTS

Division 00 -- Procurement and Contracting Requirements

00110 - Table of Contents

00 0115 - List of Drawing Sheets

001000 – Advertisement for Bids

002000 - Instructions to Bidders

004000 - Bid Form

004101 - OMNIA Partners Material Quantity Form

006000- Bonds & Certificates

008000- Supplementary Conditions

SPECIFICATIONS

Division 01 -- General Requirements

01 1100 - Summary of Work

01 2900 - Payment Procedures

01 3216 - Construction Progress Schedule

01 4100 - Regulatory Requirements

01 5000 – Temporary Facilities and Controls

01 7000 - Execution and Closeout Requirements

01 7419 - Construction Waste Management and Disposal

01 7800 - Closeout Submittals

01 7900 - Demonstration and Training

Division 02 -- Existing Conditions

02 4100 - Demolition

Division 06 -- Wood, Plastics, and Composites

06 1000 - Rough Carpentry

Division 07 -- Thermal and Moisture Protection

07 0155 – Preparation for Re-Roofing Procedures

07 5500 – Cold Process Modified Bitumen

END OF SECTION

SECTION 00 0115 - LIST OF DRAWING SHEETS

DRAWING LIST

ARCHITECTURAL

See Attached Drawings for

1. Lake Land College Roof Replacement
   Northwest & Webb Hall

END OF SECTION

ADVERTISEMENT FOR BIDS

Advertisement for Bids
Bids: 10/21/2026
LAKE LAND COLLEGE DISTRICT #517
MATTOON, ILLINOIS Project No. 2026-010

The Lake Land College District Number 517 Board of Trustees will receive sealed bids for the Northwest Building & Webb Hall Roof Replacement. A pre-bid meeting will be held on October 27th, 2026, at 10:00 AM.

Bids will be received until 1:30 PM Central Standard Time on November 17th, 2026 in the North Conference Room 030, in the Neal Hall building on the campus of Lake Land College, 5001 Lake Land Boulevard, Mattoon, IL. Bids received after this time will not be accepted. Bids will be opened and publicly read immediately after the specified closing time. All interested parties are invited to attend. Obtain bidding documents/requirements at the office of the Facilities Planning Manager, phone (217) 234-5054, jmoore3@lakelandcollege.edu.

The Board of Trustees reserves the right to waive irregularities and reject all bids or parts of bids.

Successful Bidders shall have the sole responsibility of complying with all aspects of existing Prevailing Wage Policies.

Lake Land College actively promotes continuing economic development in compliance with the Business Enterprise for Minorities, Females, and Persons with Disabilities Act (30 ILCS 575). Successful Prospective Vendors shall have the sole responsibility of complying with all aspects.

Tom Wright
Chairperson - Lake Land College Board of Trustees

INSTRUCTIONS TO BIDDERS

PART 1 GENERAL

1.01 DEFINITIONS

A. Lake Land College Board of Trustees will be hereafter referred to in this Specification as "Owners" and all correspondence shall be addressed to: Facilities Planning Manager, Lake Land College, 5001 Lake Land Blvd., Mattoon, IL 61938.

B. A Bidder is a person or entity who submits a Bid to the Owner.

C. Bidding Documents include the Advertisement for Bid, Instructions to Bidders, Bid Forms and supplements, and Addenda.

D. Contract Documents include any Contract forms, Specifications, Drawings, Addenda, and modifications.

E. An Agreement is a written agreement between the Owner and Contractor setting forth the obligations of the parties thereunder, including but not limited to the provision of the specified goods and materials, the basis of payment and the contract time.

F. A Bid is a complete and properly signed proposal to provide the goods and services for the sums stipulated therein, submitted in accordance with the Bidding Documents.

G. The Base Bid is the sum stated in the Bid for which the Bidder offers to provide the **Non-OMINA materials and labor** described in the Bidding Documents as the base, to which items may be added or from which items may be deleted for sums stated in Alternate Bids.

H. An Alternate Bid is an amount stated in the Bid to be added to or deducted from the amount of the Base Bid if the corresponding changes in the items, as described in the Bidding Documents, are executed.

I. A Unit Price is an amount stated in the Bid as a price per unit of measurement for goods or services as described in the Bidding Documents or in the proposed Contract Documents.

1.02 DOCUMENTS

A. Copies of the Bidding Documents may be obtained at the Office of the Facilities Planning Manager, 5001 Lake Land Boulevard, Mattoon, Illinois 61938, (217) 234-5054, jmoore3@lakelandcollege.edu.

1.03 EXAMINATION OF DOCUMENTS

A. Bidders shall examine all documents. Failure to do so will not relieve a successful bidder of his obligation to provide all labor and materials necessary to carry out the provision of his contract for the sum stated thereon.

B. Each Bidder, by submitting his bid represents that he has read and understands the bidding documents.

1.04 EXAMINATION OF PREMISES

A. Before submitting proposals for this work, each bidder will be held to have examined the premises and satisfied himself as to the conditions existing and under which he will be obliged to operate, or that will in any manner, affect the work of this contract.

B. No allowance will be made subsequently in this connection on behalf of the contractor for any error or negligence on his part. The contractor agrees to accept the existing conditions as found at the time of signing of contract.

1.05 AREAS, QUANTITIES AND MEASUREMENTS

A. The contractor shall be responsible for all areas, quantities, and measurements related to the work to be performed under this contract. No extra charge or compensation shall be allowed from the contractor for any error or negligence on his part. The contractor shall visit the job site and acquaint himself with all conditions concerning this work.

1.06 INTERPRETATIONS DURING BIDDING

A. If any Bidder is in doubt as to the meaning of any part of the Bidding Documents, they may submit a written request to: Facilities Planning Manager, 5001 Lake Land Boulevard, Mattoon, Illinois 61938; for an interpretation of that part.

B. Written requests for interpretations or clarifications must be made no later than three (3) working days prior to the Bid Date specified in the Advertisement for Bids.

C. Any interpretation or change will be made only by Addenda numbered, dated, and issued by the Owner to each Bidder on record as having received a set of Bidding Documents and will be available for inspection wherever the Bidding Documents are kept available for that purpose. Lake Land College will not be responsible for any other explanations or interpretations of the Bidding Documents.

1.07 SUBSTITUTION OF PRODUCTS

A. Basis-of-Design Product: The roof system specified in this section is based upon the Garland Company, Inc. Subject to compliance with requirements, provide the named product.

B. All sizes of equipment must be as specified, and all pieces of equipment must include or have those features which are set forth in the specifications.

C. Any additional explanation or statement which the Bidder wishes to make must be placed in the same envelope and attached to the proposal. Unless the Bidder so indicates, it is understood that the Bidder has bid in strict accordance with the specifications and drawings and has made no substitutions, modifications or additional stipulations.

D. Bids shall not contain any recapitulation of the work to be done and no oral, telephone, facsimile or email proposals or modifications will be considered.

1.08 QUALIFICATION OF BIDDERS

A. Bidders may be disqualified, and their Bids not considered for any of the following specific reasons:

1. Reason to believe collusion exists among Bidders.

2. The Bidder being interested in any litigation against the Owner.

3. The Bidder being in arrears on any existing contract or having defaulted on a previous contract.

4. Lack of competency as revealed by the financial statement, experience, and equipment, questionnaires, or qualification statement.

5. Uncompleted work, which in the judgment of the Owner will prevent or hinder the prompt completion of additional work if awarded.

B. If requested, a Bidder shall submit to the Owner a confidential Financial Statement in a sealed envelope.

1.09 PREPARATION OF BID:

A. All bids must be submitted on the bid form contained herein. Oral, telephone, facsimile, electronic mail, or telegraph bids will not be accepted.

B. The Bidder shall base the bid on materials complying with the Bidding Documents, and shall list all information where the bid form requires.

C. The blank spaces in the bid form shall be filled in correctly with ink or typewritten. A bid form containing an alteration or erasure of any price contained in the bid which is used in determining the lowest responsible bid shall be rejected
unless the alteration or erasure is corrected as herein provided:

1. An alteration or erasure must be crossed out and the correction printed in ink or typewritten adjacent to the alteration or erasure.

2. The person signing the bid must initial the correction in ink.

3. In the event that any price used in determining the lowest responsible bid is expressed by the Bidder in both written and numerical form, the written representation shall govern in all cases.

D. If the bid form includes alternates, each Bidder shall bid on each alternate. Failure to comply may be cause for rejection.

E. If an individual submits Bid, he or his duly authorized agent must sign his name.
If a firm, association or partnership submits the Bid, the name, address and title of each member must be given, and an official or duly authorized agent must sign the Bid. Powers of attorney authorizing agents or others to sign Bids must be properly certified and must be in writing and submitted with the Bid.

F. Bids from individuals or partnerships, if signed by an attorney-in-fact, shall have attached to the bid the power of attorney, evidencing the authority to sign the bid. If the bid is signed by any other legal entity, the authority of the person signing shall be attached to the bid.

G. A W-9 Form is required with each bid submittal.

1.10 EXEMPTION FROM SALES TAX ON MATERIALS

A. The Owner is exempted by Section Three of the Illinois Use Tax Act (Sec 3, House Bill 1610 approved July 31, 1961. IL. Rev. Stat. 1961, Chap. 120 Sec 439.3) from paying any of the taxes imposed by that act and sales to the Owner are exempt by Section Two of the Illinois Retailer's Occupation Tax Act (Section 2, House Bill 1609, Approved July 31, 1961 IL. Rev. Stat. 1961, Chap. 120 Sec. 441) from any of the taxes imposed by that Act.

1.11 IDENTIFICATION AND SUBMITTAL OF BID

A. Each bid and all papers bound and attached to it shall be placed in an envelope and securely sealed therein. The envelope shall be plainly marked with the following:

1. The word "BID"

2. Name and address of the Bidder.

B. The envelope of the bid shall be addressed to:

Facilities Planning Manager
Lake Land College
Project, Project #2026-010
5001 Lake Land Boulevard
Mattoon, Illinois, 61938

C. Bids shall be delivered before the time set for the opening of the bids. Bids arriving by mail or otherwise after the time designated for the opening of bids will be returned unopened. Oral, telephone, facsimile, electronic mail, or telegraph bids shall not be accepted.

1.12 MODIFICATION OR WITHDRAWL OF BID

A. A bid may not be modified after submittal. Bidders may withdraw a bid at any time before opening. A Withdrawal of a Bid must be made in writing or in person by a bidder or his duly authorized agent. If a firm, association or partnership wishes to withdraw a bid, an official or duly authorized agent must sign the written request or appear in person.

B. Once withdrawn, the bidder must submit a new bid prior to the opening in order to be considered.

C. No Bid may be withdrawn or modified after the Bid opening except where the award of the Contract has been delayed beyond 60 days after date of Bid.

1.13 OPENING OF BIDS

A. The Bids submitted will be opened at the time and place stated in the Advertisement for Bids and publicly read aloud and thereafter shall remain on file with the Owner.

B. After Bids are opened, the Bids will be tabulated for comparison on the basis of the Bid prices and quantities shown on the Bids.

C. The Owner reserves the right to withhold the award of the Contract for a period of 60 days from the date of the opening of Bids and no award will be made until the Owner is satisfied as to the responsibilities of the low Bidders.

D. Until final award of the Contract, the Owner reserves the right to reject any or all Bids or proceed to do the work otherwise in the best interest of the Owner.

1.14 EVALUATION AND CONSIDERATION OF BIDS

A. The Owner reserves the right to reject all bids or parts of bids, and to waive informalities therein.

B. For the purpose of determining the lowest responsible bidder in the consideration of all bids submitted, the Owner reserves the right to accept or reject any or all alternates in the numerical order in which they appear on the bid form.

1.15 DISQUALIFICATION OF BIDDERS

A. Bids will not be considered if they show any omissions, additions, alterations of form, conditions not requested unauthorized alternate Bids or irregularities of any kind. However, the Owner reserves the right to waive any irregularities and to make the award in the best interest of the Owner.

B. The Bidder acknowledges the right of the Owner to reject any or all Bids and to waive any informality or irregularity in any Bid received. In addition, the Bidder recognizes the right of the Owner to reject a Bid if the Bidder fails to submit the data required by the Bidding Documents.

C. For the purpose of determining the lowest responsible bidder in the consideration of all bids submitted, the Owner reserves the right to accept or reject any or all alternates in the numerical order in which they appear on the bid form.

1.16 APPLICABLE LAWS

A. All applicable state laws, municipal ordinances, and the rules and regulations of all authorities having jurisdiction over the Work shall apply to the Contract throughout, and they will be deemed to be included in the Contract the same as though herein written out in full.

B. Bidder's signatures shall be construed as acceptance of and willingness to comply with all provisions of the acts of the General Assembly of the State of Illinois relating to the Department of Human Rights Act, previously the Illinois.

C. Fair Employment Practices Act, Prevailing Wage Act for workers in our area, preference to citizens of the United States and residents of the State of Illinois, and discrimination and intimidation of employees. Provisions of said acts are hereby incorporated by reference and become a part of this proposal and specification.

1.17 EXECUTION OF THE AGREEMENT

A. The successful Bidder, if awarded the Project, shall sign the necessary Agreements with the Owner and furnish Payment and Performance Bonds and Certificates of Insurance, if required elsewhere in this document, but no such Agreement shall be in force and effect until it is executed by all parties, and the Payment and Performance Bonds and Certificates of Insurance have been approved.

B. Failure to execute and return the Agreement within ten (10) calendar days may result in the rescinding of the Contract award.

1.18 RECORDS:

A. The Contractor shall maintain, for a minimum of 5 years after the completion of the contract, adequate books, records and supporting documents to verify the amounts, recipients, and uses of all disbursements of funds passing in conjunction with the contract; the contract and all books, records and supporting documents related to the Contract shall be available for review and audit, and the Contractor agrees to cooperate fully with any audit conducted and to provide full access to all relevant materials.

END OF SECTION

BID FORM

PROJECT IDENTIFICATION: N o r t h West Building & Webb Hall Roof Replacement Project, Project # 2026-010

BID TO: Board of Trustees
C/O Facilities Planning Manager
Lake Land College District Number #517
5001 Lake Land Boulevard
Mattoon, Illinois, 61938

BID FROM: _____
_____
_____

The undersigned Bidder agrees, if this Bid is accepted, to enter into an Agreement with the Owner, in the form included in the Bidding Documents, to perform and furnish all Non-OMNIA materials, labor and equipment as specified or indicated in the Bidding Documents for the Bid Price and within the Bid Times indicated in this Bid and in accordance with the terms and conditions of the Contract Documents.

In submitting this Bid, Bidder represents that:

A. This Bid will remain subject to acceptance for 60 days after the day of the bid opening.

B. The Owner has the right to reject this bid.

C. Bidder will sign and submit the Agreement with the Bonds and other documents as required by the Bidding requirements within 15 days after the Owner's Notice of Award. A W-9 Form is required.

D. Bidder has copies of all the Bidding Documents.

E. Bidder is familiar with federal, state and local laws and regulations.

F. Bidder has correlated the information known to Bidder with the Bidding Documents.

G. This Bid is genuine and not made in the interest of or on the behalf of an undisclosed person, firm or corporation and is not submitted in conformity with an agreement or rules of a group, association, organization or corporation; Bidder has not directly or indirectly induced or solicited another Bidder to submit a false or sham Bid; Bidder has not solicited or induced a person, firm or corporation to refrain from bidding; and Bidder has not sought by collusion to obtain for itself an advantage over another Bidder or over the Owner.

H. Bidder has received the following addenda receipt of which is hereby acknowledged.

No. _____ Dated _____
No._____ Dated _____
No._____ Dated_____

1. Bidder will provide all Non-OMNIA materials, labor and equipment as specified in accordance with the Contract Documents for the following price(s):

BASE BID 1:
(Northwest Building Roof Replacement) _____Dollars ($_____)
(use words) (figures)

1. To furnish all labor and non-omnia materials as shown and specified.
2. To complete Base Bid in _____calendar days.
3. To complete Alternate Bid in _____calendar days.
4. To work_____working days per week.
5. Crew size of _____men per day.
6. To begin work _____days after notice of award of contract.

Base Bid 2
(Webb Hall Roof Replacement) _____Dollars ($_____)
(use words) (figures)

1. To furnish all labor and non-omnia materials as shown and specified.
2. To complete Base Bid in _____calendar days.
3. To complete Alternate Bid in _____calendar days.
4. To work_____working days per week.
5. Crew size of _____men per day.
6. To begin work _____days after notice of award of contract.

2. UNIT PRICES: The undersigned agrees, in case of variation of quantities from those shown or specified, the following unit prices will be used in adjusting the Contract price. If additional quantities are authorized in advance by the Owner. The following amount will be added to the Contract:

1. Cost per 100 sq. ft. Metal Deck Replacement $_____
2. Cost per board foot of Wood Nailer Replacement $_____

Bidder agrees to provide all Non-OMNIA materials, labor and equipment, as specified.

SUBMITTED ON_____,2026

Company_____,(Seal)

Signed_____

_____
(Printed Name)

Phone _____

Fax _____

Email _____

END OF SECTION

SECTION 00 41 01 – OMNIA PARTNERS MATERIAL QUANTITY FORM

The bidder in response to your invitation to bid, has carefully examined the site of the proposed work and Contract Documents. The bidder hereby proposes to furnish all labor, non-OMNIA Partners materials, supplies and services required, in the manner prescribed therein and to the standards of quality and performance established by the Specifications, within the price stated herein for each of the items or combination of items stipulated.

This bid proposal is hereby presented to **Lake Land College** for the Northwest Building & Webb Hall Roof Replacement project including all other work associated, by:

1.1. OMNIA Partners:

A. It is the intent of [**Lake Land College**] ("Agency") to purchase materials for the [**West Building Roof Replacement**] ("Project") located at [5001 Lake Land Blvd., Mattoon, IL 61938] directly from Garland/DBS, Inc., based upon the Agency's participation in the Omnia Partners™ Government Purchasing Alliance's program for Roofing Supplies and Related Products and Services, as priced by and awarded to Garland/DBS, Inc., resulting from the competitively solicited Sealed Bid # PW1925 issued by the Racine County Board of Commissioners.

B. As a bidder on the Project, you are required to fill in your order quantities for the following materials as listed below: **(See next page for itemized list)**

Base Bid #1: Northwest Building

Product #	Material	Unit	Coverage	Quantity
4902	SBS Modified Mineral Cap (Mineral Field and Flashing Cap)	1 roll	75 sq.ft.	
4143-80-P	SBS Modified Base (Field & Flashing Base)	1 roll	100 sq.ft.	
7336-55	Cold Applied Interply Adhesive	55 gal	2.25-2.5 Gal per square	
7336-5	Cold Applied Interply Adhesive	5 gal pail	2.25-2.5 Gal per square	
7425-5	Aluminized Mastic	5 gal pail	1 gal/7 lnr ft	
4840-6	Fiberglass Mesh	1 roll	6" x 150'	
SSFS22STD	Flat Stock Metal	1 Piece	4'x10'	
MEA-RMF:875-Z24	Fascia	1 piece	per lineal foot	
MEA-RMF:8750C-Z24	Outside Miter	1 piece	1 piece	
MEA-RMF:875IC-Z24	Inside Miter	1 piece	1 piece	
MEA-RMF:875L-Z24	Left End Cap	1 piece	1 piece	
MEA-RMF:875R-Z24	Right End Cap	1 piece	1 piece	
COPE24KYN22	COPING CAP	Coping x 120"	1 piece	
CCMT50MIL22	MITER	1 piece	1 piece	
CCEC50MILSS	END CAP	1 piece	1 piece	
CCTR50MIL22	TRANSITION	1 piece	1 piece	
CCTE50MIL22	TEE	1 piece	1 piece	

Base Bid #2: Webb Hall

Product #	Material	Unit	Coverage	Quantity
4902	SBS Modified Mineral Cap (Mineral Field and Flashing Cap)	1 roll	75 sq.ft.	
4143-80-P	SBS Modified Base (Field & Flashing Base)	1 roll	100 sq.ft.	
7336-55	Cold Applied Interply Adhesive	55 gal	2.25-2.5 Gal per square	
7336-5	Cold Applied Interply Adhesive	5 gal pail	2.25-2.5 Gal per square	
7425-5	Aluminized Mastic	5 gal pail	1 gal/7 lnr ft	
4840-6	Fiberglass Mesh	1 roll	6" x 150'	
SSFS22STD	Flat Stock Metal	1 Piece	4'x10'	
MEA-RMF:875-Z24	Fascia	1 piece	per lineal foot	
MEA-RMF:8750C-Z24	Outside Miter	1 piece	1 piece	
MEA-RMF:875IC-Z24	Inside Miter	1 piece	1 piece	
MEA-RMF:875L-Z24	Left End Cap	1 piece	1 piece	
MEA-RMF:875R-Z24	Right End Cap	1 piece	1 piece	
COPE24KYN22	COPING CAP	Coping x 120"	1 piece	
CCMT50MIL22	MITER	1 piece	1 piece	
CCEC50MILSS	END CAP	1 piece	1 piece	
CCTR50MIL22	TRANSITION	1 piece	1 piece	
CCTE50MIL22	TEE	1 piece	1 piece	

PLEASE NOTE:

A. It is the responsibility of the bidder to obtain any product related information from the Manufacturer representative prior to bid submission.

B. Material quantities will be cross-referenced to an expected Project take-off to verify accuracy. Any bids that have material quantities substantially below or above the anticipated requirements for the Project will be rejected unless a detailed explanation is provided.

C. Contractors are responsible for material quantities.

D. Contractors are responsible for coordinating and taking delivery of materials, owner will not be responsible for storing, unloading, loading materials, or damage of materials.

END OF SECTION 00 4101

BONDS & CERTIFICATES

PART 1 GENERAL

1.01 BID DEPOSIT AND CONTRACT SECURITY

A. No bid security will be required for this project.

1.02 PERFORMANCE BOND AND LABOR AND MATERIAL PAYMENT BOND

A. Performance Bond required for bids over $50,000.

B. Contractors shall be required to furnish, in duplicate, a Performance Bond and a Labor and Material Payment Bond in strict conformance to, and submitted on A.I.A. Document A-312 equal to the full amount of their Contract covering the faithful performance of the Contract and the payment of all obligations arising thereunder in such form as the Owner may prescribe and with such sureties as he may approve.

C. The Contractor's Bonding Agency shall carry either a Rating of "A-VIII" on the AM Best Rating System or be able to show Comparable Financial Status and Bonding Volume. Acceptance of Bonding Agency qualification shall be approved by the Owner.

D. NOTE: This Performance Bond, and Labor and Material Payment Bond, shall be furnished and in effect before any work is started under this Contract.

E. The life of the Bond and guarantee shall extend twelve (12) months beyond the day on which final payment under the Contract falls due, or the date of which the Owner accepts the work as completed whichever comes first. If final acceptance is by mutual agreement, a proper date shall be determined.

F. If before the expiration of the twelve (12) month guarantee period, a Contractor has been notified by the Owner regarding any work to be completed or corrected, any unpaid bills presented to the Owner, or any other unfinished business, the expiration of the twelve (12) month period does not relieve the Contractor or his bondsmen of the proper execution of such items.

G. The Contractor or his bondsmen shall pay any lien or court costs and attorney's fee of the Owner, and cost that any creditor may incur in the forced collection of any just claim, and interest from date of filing lien until payment is made.

H. In the event the Contractors should default and it becomes necessary for the sureties to complete the Contract, the Owner reserves the right to approve all Contractors and Subcontracts obtained by the sureties.

I. The General Conditions of this Contract shall govern all issued, and any provisions of the bonds in conflict with these general conditions shall be waived.

1.03 FAILURE TO FURNISH PERFORMANCE BOND

A. Should the successful Bidder fail or refuse to sign a formal written Contract with the Owner, or fail or refuse to furnish a Performance Bond satisfactory to the Owner and the Manager within ten (10) days after written notification of the acceptance of the proposal by the Owner, the Bidder will be considered to have abandoned the proposal. In such event the Owner shall retain all proceeds of the Bid Security (Bid Bond or Certified Check) in order to secure a "Successful Bidder". The term "Successful Bidder" shall be deemed to include any bidder whose proposal is accepted by the Owner.

1.04 COMPENSATION AND PUBLIC LIABILITY INSURANCE

A. Principal Contractors shall carry sufficient insurance on their workmen to absolutely protect the Owner from any liability or damage resulting to the workmen as provided under the "Workmen's Compensation Act", and "Structural Works Act".

B. The Principal Contractors and all Subcontractors performing services on said site shall take out and furnish to the Owner, and maintain during the life of this Agreement, complete Owner's Protective Liability Insurance in the amounts as specified herein for bodily injury, property damage, liability, or damage resulting to the Workmen as provided under the Workmen's Compensation and Structural Works Act of the State of Illinois as shall protect the Owner, Principal Contractor, and any Subcontractor performing work covered by this Agreement from claims for damages of personal injury including accidental death, as well as, from claims for property damage which may arise from operations under this Agreement, whether such operations be by the Principal Contractors or by any Subcontractors or by anyone, directly or indirectly employed by either of them, and the amounts of such insurance shall not be less than:

1. Comprehensive Automobile Liability:

a) $1,000,000 Bodily Injury per person.
b) $1,000,000 Bodily Injury per occurrence.
c) $ 500,000 Property Damage per occurrence.
d) $1,000,000 Combined Single Limit coverage for bodily injury and property damage per occurrence in the same aggregate limit will be accepted in lieu of the separate limits specified above.

2. Workman's Compensation: Statutory Limits

a) Employer's Liability: $500,000 Bodily Injury per person.

b) The Contractor may use a Self-Insured plan for Workman's Compensation Insurance if the plan is approved by the State of Illinois. For approval, the Contractor shall obtain a Certificate from the Illinois Industrial Commission, Office of Self-Insurance Administration, Springfield office.

3. Comprehensive general Liability:

a) $1,000,000 Bodily Injury per person.
b) $2,000,000 Product and Completed Operations Aggregate
c) $1,000,000 Bodily Injury aggregate limit.
d) $1,000,000 Property Damage per occurrence.
e) $2,000,000 Property Damage aggregate limit.

f) $1,000,000 Combined Single Limit coverage for bodily injury and property damage per occurrence in the same aggregate limit will be accepted in lieu of the separate limits specified above.

4. Umbrella

a) $1,000,000 Umbrella

B. The above Comprehensive General Liability Insurance shall be specifically endorsed to cover the terms of Liability Insurance for the Owner as set forth hereinafter.

C. The Contractor shall cause Certificates of Insurance to be deposited with the Owner.

1.05 LIABILITY INSURANCE FOR OWNER

A. The Contractor shall purchase and maintain public liability insurance naming the Owner and his agents and employees as insured with respect to any claim that may be made against the Owner or his agents and employees arising out of or resulting from the performance of the Work, provided that any such claim, damage, loss or expense shall be covered by such insurance only if (a) it is attributable to bodily injury, sickness, disease or death, or to injury to or destruction of tangible property (other than the Work itself) including the loss of use resulting therefrom, and (b) is caused in whole or in part by any negligent act or omission of the Contractor, any Subcontractor, anyone directly or indirectly employed by any of them or anyone for whose acts any of them may be liable regardless of whether or not the claimant contends that the Owner or his agents or employees are in part negligent or otherwise legally culpable with regard to the loss.

B. Such insurance shall provide a defense for the Owner and his agents and employers, including the cost of defense counsel and other expenses of litigation.

C. Principal Contractors shall carry the insurance of their Subcontractors or shall require their Subcontractors to carry their own insurance in the amounts stated above.

D. This insurance shall cover all Agreements and any extra work connected with the construction of this Project.

E. Contractors shall instruct their Insurance Companies to supply the Owner with Certificates of Insurance showing that such insurance is kept in force until completion of the Agreement. These Certificates of Insurance shall be provided before Contractors start any work under this Agreement.

1.06 BUILDERS RISK INSURANCE (Owner)

A. Immediately after the signing of construction contracts or at such time as construction materials become situated upon the construction site or sites, the Owner will affect and maintain upon the entire structure on which work of this Contract is to be done, and upon all materials, on or adjacent thereto, intended for use thereon, to 100 percent of the insurable value thereof, an All- Risk Coverage Insurance Policy.

B. This insurance will not cover Contractor's equipment, tools, or storage sheds and temporary buildings.

C. Any loss is to be made adjustable with and payable to, the Owner, Contractors, Subcontractors, and Material Dealers as their interests may appear at the time of loss.

D. The Owner, Contractor, and all Subcontractors waive all rights of action, each against the others, for damages caused by fire or other perils covered by insurance provided for under the terms of this Contract, except such rights as they may have to the proceeds of insurance held by the Owner as trustee.

END OF SECTION

SUPPLEMENTARY CONDITIONS

PART 1 GENERAL

1.01 DEFINITIONS

A. Where the term "Owner" is used throughout these specifications same shall mean the Lake Land College Board of Trustees as their agent.

B. Where the term "Manager" is used, it shall refer to the Manager of Facilities Planning Manager.

C. Where the term "Contractor", "Prime Contractor", or "Principal Contractor" is used, it refers to anyone having a Principal Contract with the Owner.

D. Where the term "Subcontractor" is used, it refers to anyone having a Contract for labor or material with any of the Principal or Prime Contractor on the job.

1.02 THEFT, ETC.

A. The Contractors shall be responsible for any damage or loss resulting to the work, materials, or tools due to theft, or in any manner not covered by the insurance called for elsewhere in these Specifications. Payments on account of Contract do not relieve Contractors of this obligation. Contractors may carry Theft Insurance at their own option.

1.03 SOCIAL SECURITY, UNEMPLOYMENT INSURANCE

A. The Contractors shall keep records and pay, all social security, withholding tax, unemployment insurance, and other taxes imposed by the various governmental authorities and laws.

1.04 MATERIAL AND WORKMANSHIP

A. The owner or his agent shall have full power to reject any material or workmanship which, in their opinion, do not conform with these specifications or drawings, and cause same to be immediately removed and reconstructed without additional cost to the Owner.

1.05 PERMITS

A. The Owner will obtain and pay for all permits required by Local Law, except as indicated otherwise in these specifications.

1.06 CLEANING OF GROUNDS AND BUILDINGS

A. At the completion of the project and before final acceptance by the Owner, the area shall be cleared of all rubbish, materials, and debris which accumulate during the process of work under this Contract. See section 01110 – Summary of Work, of these Specifications.

1.07 SUBCONTRACTORS

A. The Principal Contractors shall be responsible for any and all Subcontractors working under them, and shall carry insurance for them or see that they are carrying it themselves so as to relieve the Owner of any and all liability.

B. Nothing contained in the Contract Documents shall create any contractual relation between any Subcontractor and the Owner.

C. The Owner assumes no responsibility for the overlapping or omission of parts of the work by various Subcontractors in their Contracts with the Principal Contractors.

1.08 PATCHING

A. The expense of any undue alterations, cutting, patching, or repairing of damage due to carelessness or neglect caused by any trade shall be borne by the Contractor for that trade. The work shall be done by the workmen of the Contractor whose work was damaged so that such patching will be least conspicuous.

1.09 OTHER WORK NOT IN CONTRACT

A. The Owner reserves the right to let separate Contracts for other work in connection with this project, but agrees that such work shall not interfere with the work of the Contracts previously made.

1.10 EXTRAS AND CHANGES

A. Should any extra work or changes be required during the work, the Owner and Contractor shall agree upon the price for such extra work or changes and the Owner shall issue a change order to the Contractor for such work as agreed upon. Payment shall be made under same conditions as for original Contract.

B. No payment shall be made for extra work or materials unless a formal written change order is issued by the Owner.

1.11 CORRECTION OF WORK AFTER FINAL PAYMENT

A. Neither the final Certificate, nor payment, nor any provision in the Contract Documents shall relieve the Contractor of responsibility for faulty materials or workmanship discovered to be not as specified or shown on the Drawings.

B. The Contractor shall remedy any defects due thereto, and pay for, any damages to other work resulting therefrom, which shall appear within a period of one year from the date of acceptance.

C. The Owner shall give notice of observed defects with reasonable promptness. The Owner shall judge the defects as to maintenance, workmanship, or material defects.

D. All questions arising under this article shall be decided by the Owner subject to arbitration.

1.12 LOCAL LABOR

A. It is the desire of the Owner that the Contractors make use of all local labor, material, insurance, etc., if possible, as long as it does not work a hardship on the Contractors.

1.13 PRECEDENCE OF DOCUMENTS

A. The Contract Documents shall be given precedence in the following order, provided they are in existence at the time of the closing of the Contracts:

1. Agreement
2. General Conditions of the Contract
3. Any Valid Building Code
4. Specifications
5. Full Sized Detail Drawings

6. Large Scale Drawings
7. General Drawings

1.14 PROTECTION OF GENERAL PUBLIC

A. All Contractors shall provide protection of the general public at all times, providing protection devices as prescribed by laws having jurisdiction.

B. The Contractor will, at all times, take all reasonable precautions for the safety of employees on the project, and of the public and all other persons who may be affected, and will comply with all applicable provisions of Federal, State, and Municipal Safety Laws and Building and Construction Codes.

1.15 GUARANTEE & WARRANTIES

A. All Prime Contractors shall guarantee their work and the work of their Subcontractors for a period of one year from the date of acceptance of their work, unless stipulated for a longer period of time under specific sections of the specifications.

B. All items requiring a warranty certificate from the manufacturer shall be executed and the certificate delivered to the Owner before final payment can be approved.

1.16 SUPERINTENDENT

A. The General Contractor shall keep a capable superintendent on the job site at all times when major work is in progress. This Superintendent shall lay out all work required under the Contract and also assist other Contractors in laying out and planning their work.

B. The Contractors, or his Superintendent, shall also notify other Contractors when it will be necessary to install certain work and take complete responsibility for co- ordination of construction.

1.17 REQUIREMENTS

A. All Contractors shall comply with all laws, rules and regulations governing the work under this Contract.

B. Should the Contractor observe anything in the contract documents that is contrary to any code requirement, he shall notify the Owner immediately in writing. The Owner shall issue all changes required to correct the variance, and be responsible for code interpretations.

1.18 OCCUPATIONAL SAFETY AND HEALTH

A. It shall be each Contractor's responsibility to comply with all local, state and federal laws and regulations governing job safety and health standards, and the requirements of the "Occupational Safety and Health Act of 1970" enacted by Congress and signed into law on December 29, 1970 and all applicable changes, revisions, and amendments.

1.19 FAIR EMPLOYMENT PRACTICES

A. All Contractors agree that, in accordance with an Act to prohibit discrimination and intimidation on account of race or color in employment and Contracts for public buildings or public works, approved July 8, 1933, as amended, no person will be refused or denied employment in any capacity on the grounds of race or color, nor be discriminated against in any manner by reason thereof in connection with the performance of the work set forth in the attached drawings and specifications; nor will any unfair employment practice, as defined in the Fair Employment Practices Act, approved July 21, 1961 and all applicable changes, revisions, and amendments, be committed by the said Contractor.

1.20 PREVAILING WAGE POLICY

A. The Owner has established a general prevailing rate of hourly wage in said District, as determined by the Illinois Department of Labor.

B. All Contractors and Subcontractors shall comply with the following and any later amendments thereto:

C. "Illinois Statutes, as amended by Act approved August 8, 1961, (SB No. 250) (Rev. State Chap. 48, Sec. 39S-1 et. seq.) declared to be the policy of the State of Illinois that a wage of no less than the general prevailing hourly rate as paid for work of a similar character in the locality in which the work is performed, shall be paid to all laborers, workmen and mechanics employed by or on behalf of any and all public bodies engaged in public works, exclusive of maintenance work."

D. Contractors shall have the responsibility of complying with all aspects of the Prevailing Wage Policy.

E. Certified payroll documentation must be provided to the college by the 15th of the following month.

1.21 BUSINESS ENTERPRISE FOR MINORITIES, FEMALES, AND PERSONS WITH DISABILITIES ACT

A. On August 25, 2015, Governor Rauner signed into law the Business Enterprise for Minorities, Females, and Persons with Disabilities Act (30 ILCS 575), effective immediately. The Act stipulates certain requirements regarding the use of businesses owned by minorities, females and persons with disabilities for the procurement of goods and services by State agencies, universities, and community colleges.

B. The College recognizes the importance of increasing the participation of businesses owned by minorities, females and persons with disabilities in public contracts in an effort to overcome the discrimination and victimization such firms have historically encountered. It is the College's policy to promote the economic development of businesses owned by minorities, females and persons with disabilities by setting aspirational goals to award contracts to businesses owned by minorities, females, and persons with disabilities for certain services as provided by the Business Enterprise for Minorities, Females and Persons with Disabilities Act, 30 ILCS 575/0.01 et seq. (the "Act") and the Business Enterprise Council for Minorities, Females, and Persons with Disabilities (the "Council").

C. Certified Business Enterprise Contractors

1. In determining whether a business is owned by a minority, female, or person with disabilities, the College shall require the business to provide proof of certification by the Business Enterprise Council, an entity delegated the authority to make certifications by the Business Enterprise Council, or by a state agency with statutory authority to make such a certification, that the business entity is owned by a minority, female, or person with a disability, or by submitting an ownership affidavit provided by the College.

D. Subcontractors and Suppliers

1. The College's aspirational goals are based on the total dollar amounts awarded to businesses owned by minorities, females, and persons with disabilities. All funds awarded to any certified subcontractors and/or suppliers shall be included for the College's aspirational goals, so long as the expenditures are direct, necessary, and proximately related to the work or service of the contract.

E. Evaluation of Contracts to Facilitate Aspirational Goals

1. These procedures shall not eliminate, alter, reduce, alleviate or modify in any way the College's procedures for purchasing. However, in addition to the College's purchasing procedures, the College shall evaluate all contracts, except those subject to federal reimbursement, to determine whether the bidder or contracting party assists the College in meeting its aspirational goals as set forth above, and increase the participation of businesses owned by minorities, females, and persons with disabilities in contracts with the College.

F. Bidding Requirements.

1. Bid Documents

a. When the College procedures and/or state law require the College to competitively bid a contract, the College shall state in its bid documents the College's aspirational goal for the contract. The College's bid documents shall also require each bid submitted for a contract to include: (i) the bidder's name, (ii) the bid amount, and (iii) a business enterprise program utilization plan indicating the percentage of disadvantaged businesses that will be awarded by the bid.

2. Lowest, Responsive and Responsible Bidder

a. As required by state law and the College's purchasing procedures, the College shall award contracts subject to state public bidding requirements to the lowest, responsive and responsible bidder. A bidder's failure to complete a utilization plan or submit necessary certifications shall be an issue of "responsiveness" which may make the bidder ineligible to receive the contract. In awarding contracts, the College shall also consider that the definition of "lowest responsible bidder" is broader than "lowest bidder" or "financially responsible", and that in proper circumstances, certain public interests can be considered as "responsible" in the College's discretion as allowed by applicable state laws, rules or regulations.

3. Opportunity to Cure

a. In the event that a bidder offers the lowest, responsive and responsible bid but fails to meet the contract's aspirational goals, the College shall notify the bidder of this deficiency and give the bidder no more than ten (10) days to cure that deficiency. The College may provide the bidder with sufficient information necessary to obtain the Business Enterprise Council's list of certified businesses owned by minorities, females and persons with disabilities. The bidder may only cure this deficiency by subcontracting with businesses that are certified as provided in these procedures.

4. Good Faith Effort Procedures

a. If the bidder cannot meet the contract's aspirational goal, the bidder must document in the utilization plan its good faith efforts that could reasonably have been expected to meet the goal. The College shall consider the quality, quantity, and intensity of the bidder's efforts, and may evaluate the bidder's:

i) Solicitation through all reasonable and available means of certified subcontractors, suppliers, and/or vendors that have the capability to perform the work required by the contract. The bidder must solicit this interest to give

certified businesses sufficient time to respond to the solicitation,

must provide adequate information about the plans, specifications, and contract requirements in a timely manner, and must take appropriate steps to follow up initial solicitations.

ii) Use of resources from the College, the Business Enterprise Council, and any other business or community groups that provide assistance in the recruitment and placement of certified businesses.

iii) Selection of portions of the contract work to be performed by certified vendors to increase the likelihood that the goal will be achieved. This includes, where appropriate, breaking out contract work items or services into economically feasible units to facilitate participation by certified businesses, even when the bidder might otherwise prefer to perform the work or services with its own employees.

iv) Negotiation in good faith with interested certified businesses. In order to show good faith efforts, the bidder's utilization plan shall include the names, addresses, and telephone numbers of certified businesses that were considered, and an explanation for why an agreement could not be reached.

v) Thorough investigation of the capabilities of certified businesses and not rejecting them as unqualified without sound reasons.

vi) Efforts to assist interested certified businesses in obtaining contract required lines of credit, insurance, equipment, supplies, materials, or other related assistance or services.

5. Award of Contract

a. If the College determines that the bidder is the lowest, responsive and responsible bidder and has either met the contract's aspirational goals or has made a good faith effort to meet the goal, the College may award the contract to the bidder. The College shall have the right to reject all bids and re-bid the contact in its sole discretion.

6. Incorporation into Contract

a. The successful bidder's utilization plan shall become part of the awarded contract and shall not be modified or amended without the College's written consent.

END OF SECTION

SUMMARY OF WORK

PART 1 GENERAL

1.01 SCOPE

A. All Contractors are required to comply with the following basic requirements.

B. The project consists of a complete tear off down to the metal deck, new insulation, recovery board, and 2 ply modified roof system in cold processed adhesive. New sheet metal to be installed per drawing.

C. Base Bid: Roof Sections 4-12 installed in polymer adhesive.

D. Alternate Bid 1: Roof sections 1-3, 15-17 installed in polymer adhesive.

Base Bid #1 Scope of Work: Northwest Building

1. Remove existing roof down to deck and dispose of according to all local and state guidelines.
2. Mechanically attach 2 layers of 2.6" rigid polyisocyanurate per wind uplift found in drawing, using approved wind-up lift requirements.
3. Install ½" primed dens-deck set in approved insulation adhesive per wind up lift requirements.
4. Install ½ -12 tapered crickets and saddles as shown on drawings.
5. Install Modified SBS base sheet set in cold applied asphalt at 2.5 gal per square.
6. Install Modified Mineral SBS cap sheet set in cold applied asphalt at 2.5 gal per square and heat weld all field and flashing seams.
7. Flashings shall consist of:

a.) SBS modified base sheet set in cold applied flashing adhesive at 5 gal per square.
b.) SBS modified mineral cap sheet set in cold applied flashing adhesive at 5 gal per square and heat weld all vertical seams.
c.) Three-course inside and outside corners of curbs and walls with approved flashing adhesive and mesh.

8. Replace clamping rings and strainers on drains, make sure they are all painted with Rustoleum fire engine red spray paint.
9. All soil stacks and drains shall receive new leads.
10. See drawings for all metal flashing details and components.
11. Contractors need to verify that insulation is correct.
12. Drains must be sumped and not hold water.

Base Bid #2 Scope of Work: Webb Hall

1. Remove existing roof down to deck and dispose of according to all local and state guidelines.
2. Mechanically attach 2 layers of 2.6" rigid polyisocyanurate per wind uplift found in drawing, using approved wind-up lift requirements.
3. Install ½" primed dens-deck set in approved insulation adhesive per wind up lift requirements.
4. Install ½ -12 tapered crickets and saddles as shown on drawings.
5. Install Modified SBS base sheet set in cold applied asphalt at 2.5 gal per square.
6. Install Modified Mineral SBS cap sheet set in cold applied asphalt at 2.5 gal per square and heat weld all field and flashing seams.
7. Flashings shall consist of:

a.) SBS modified base sheet set in cold applied flashing adhesive at 5 gal per square.
b.) SBS modified mineral cap sheet set in cold applied flashing adhesive at 5 gal per square and heat weld all vertical seams.
c.) Three-course inside and outside corners of curbs and walls with approved flashing adhesive and mesh.

8. Replace clamping rings and strainers on drains, make sure they are all painted with Rustoleum fire engine red spray paint.
9. All soil stacks and drains shall receive new leads.
10. See drawings for all metal flashing details and components.
11. Contractors need to verify that insulation is correct.
12. Drains must be sumped and not hold water.

1.02 LOCATION

A. This project is located on the campus of Lake Land College, 5001 Lake Land Boulevard, Mattoon, Illinois.

1.03 COMMENCEMENT AND COMPLETION DATE

A. All work on this project is subject to the College's schedule and circulation needs, which are as follows:

1. Coordinate Work schedule with the College. This project and bid will be taken to the Board of Trustees meeting in December of 2026 for approval. Coordination of the work schedule can begin after Board approval is granted with completion no later than August 9, 2027.

2. Two days' notice is required for schedule changes.

3. Saturdays and Sundays are available with prior approval from the College.

4. Any alternate dates MUST be coordinated with the College.

5. PROVIDE PROPOSED SCHEDULE WITH BID.

1.04 COORDINATION WITH OWNER

A. The campus will be occupied by the Owner and the general public during all phases of construction. It shall be the Contractors responsibility to coordinate the work with the Owner to maintain access to roadways, parking and buildings during normal hours of operation, and to minimize conflict with the College's schedule.

B. Sequence of work shall be coordinated with the College be scheduled to minimize inconveniences for the College students and staff.

C. A copy of the College calendar is available upon request.

D. The Contractor shall notify the Owner three (3) working days prior to commencing work on site.

1.05 CONTRACTOR'S RESPONSIBILITIES

A. The General Contractor on this project regardless of whether he has a Contract for the General Construction or complete Construction Work shall have the responsibility of coordinating and directing the work. This shall include the scheduling and/or co-ordination of all other Prime Contractors having a contract with the Owner and shall include assistance to these Contractors in the layout of their work when it must be coordinated with work the General Contractor is performing. The General Contractor shall include the cost of performing this co-ordination in his Bid.

B. The remaining Prime Contractors and Subcontractors on the project will be charged with scheduling their own work so that it can be coordinated with the General Contractors schedule. They shall give the General Contractor their full co-operation.

1.06 UTILITY SERVICE DISRUPTION

A. This project will not require interruption of utility service.

1.07 BUILDING PROTECTION

A. The Contractor shall be responsible for protecting the existing buildings and contents from damage from any cause as a result of work to be performed under this Contract. Any damaged to buildings or contents shall be repaired or replaced to equal the original condition of the damaged area or contents.

B. All damaged buildings or contents shall be repaired or replaced at the Contractor's expense and to the satisfaction of the Owner.

1.08 SITE PROTECTION

A. The Contractor shall be responsible for protecting the adjacent site from damage from any cause as a result of work to be performed under this Contract. Any damaged areas, including yard areas and plants, walks, steps, paved areas, irrigation system, etc., shall be repaired or replaced to equal the original condition of the damaged areas.

B. All damaged areas shall be repaired at the Contractor's expense and to the satisfaction of the Owner.

1.09 MATERIAL STORAGE

A. The Owner will allocate certain areas of the site for the purpose of storing materials and equipment and locating the Contractor's temporary office. The Contractors shall contact the Owner before any materials are situated in the building or on the site and determine a general plan for storing materials.

B. Materials shall be placed on the site in a neat and orderly manner.

1.10 CLEANING OF GROUNDS

A. The site shall be maintained free of unnecessary debris and clutter during all phases of construction.

B. At the completion of the project and before final acceptance by the Owner, the site shall be cleared of all rubbish, materials, and debris which accumulated during the process of construction.

END OF SECTION

PART 1 GENERAL

1.01 PAYMENTS

A. The Owner will make payment on account of the Contract as follows:

1. Upon completion of all work as directed in these specifications the Contractor shall request payment in full. Payment made via ACH is strongly encouraged.

2. Payment will be made provided Manager certifies that the work meets all requirements of these specifications. Successful bidder must provide a W-9 for processing of payment.

3. The Contractor shall provide an invoice for the work which will satisfy the following:

1) Itemize separate line-item cost for each major division of work, using specifications Table of Contents as basis for format for listing cost of work.

2) List all major subcontracts and subcontractors.

3) All forms must be typed and all sections of the forms completed.

4) All forms must have ORIGINAL SIGNATURE and be NOTARIZED.

1.02 PAYMENTS WITHHELD

A. The Owner may withhold, or on account of subsequently discovered evidence, nullify the whole or part of any payment to such an extent as may be necessary to protect the Owner from loss on account of:

1. Defective work not remedied.

2. Claims filed or reasonable evidence indicating probable filing of claims.

3. Failure of the Contractor to make payment properly to Subcontractors for materials and/or labor.

4. A reasonable doubt that the Contract can be completed for the balance then unpaid.

5. Damage to another Contractor.

B. When the above conditions are remedied payment will be made for the amounts withheld.

C. Should the Contractor fail to perform any work according to the drawings and specifications, or should he refuse to correct any work not done according to the drawings and specifications, the Owner may, after having given the Contractor ten days written notice, construct such work or make repairs necessary to meet the requirements of the Contract. The cost of such work shall be deducted from the final payment due the Contractor.

LIEN WAIVERS

A. Before final payment, the Contractor shall submit Lien Waivers marked "FINAL" from all Subcontractors and Material Suppliers covering all labor and materials furnished on the job. All Lien Waivers shall have ORIGINAL SIGNATURES and be NOTARIZED.

B. If any Lien or unpaid bills should be presented to the Owner after full payment has been made to a Contractor, the Contractor or his bondsmen shall refund to the Owner all the money the latter may be compelled to pay in discharging such obligations, including all court costs and reasonable attorney's fees.

C. During the course of construction should there be any doubt regarding whether or not the Contractor has been paying his bills or subcontractors promptly, Waivers of Lien - Partial may be requested and shall be submitted.

END OF SECTION

SECTION 01 3216 - CONSTRUCTION PROGRESS SCHEDULE

PART 1 GENERAL

1.1. SECTION INCLUDES

A. Preliminary schedule.

1.2. SUBMITTALS

A. Within 10 days after date of Agreement, submit preliminary schedule using a Gantt Chart Software

B. If preliminary schedule requires revision after review, submit revised schedule within 10 days.

C. Submit updated schedule with each Application for Payment.

1.3. QUALITY ASSURANCE

A. Scheduler: Contractor's personnel or specialist Consultant specializing in CPM scheduling with one years minimum experience in scheduling construction work of a complexity comparable to this Project, and having use of computer facilities capable of delivering a detailed graphic printout within 48 hours of request.

1.4. SCHEDULE FORMAT

A. Listings: In chronological order according to the start date for each activity. Identify each activity with the applicable specification section number.

PART 2 PRODUCTS - NOT USEDPART 3

EXECUTION

3.1. PRELIMINARY SCHEDULE

A. Prepare preliminary schedule in the form of a horizontal bar chart.

3.2. CONTENT

A. Show complete sequence of construction by activity, with dates for beginning and completion of each element of construction.

B. Identify each item by specification section number.

C. Show accumulated percentage of completion of each item, and total percentage of Work completed, as of the first day of each month.

D. Provide separate schedule of submittal dates for shop drawings, product data, and samples, owner- furnished products, products identified under Allowances, and dates reviewed submittals will be required from Owner. Indicate decision dates for selection of finishes.

E. Indicate delivery dates for owner-furnished products.

G. Provide legend for symbols and abbreviations used.

CONSTRUCTION PROGRESS

3.3. BAR CHARTS

A. Include a separate bar for each major portion of Work or operation.

B. Identify the first workday of each week.

3.4. UPDATING SCHEDULE

A. Maintain schedules to record actual start and finish dates of completed activities.

B. Indicate progress of each activity to date of revision, with projected completion date of each activity.

C. Annotate diagrams to graphically depict current status of Work.

D. Identify activities modified since previous submittal, major changes in Work, and other identifiable changes.

E. Indicate changes required to maintain Date of Substantial Completion.

F. Submit reports required to support recommended changes.

G. Contractor will be responsible for sending a weekly update email as to where there company is in regards to the schedule provided.

3.5. DISTRIBUTION OF SCHEDULE

A. Distribute copies of updated schedules to Contractor's project site file, to subcontractors, suppliers, Owner, and other concerned parties.

B. Instruct recipients to promptly report, in writing, problems anticipated by projections indicated in schedules.

END OF SECTION

SECTION 01 4100 - REGULATORY REQUIREMENTS

PART 1 GENERAL

1.1. SUMMARY of Reference Standards

A. Regulatory requirements applicable to this project are the following:

B. Factory Mutual Roof Nav

C. ADA Standards - Americans with Disabilities Act (ADA) Standards for Accessible Design; 2010.

D. Illinois Accessibility Code/1997 and ICC/ANSI A117.1 - 2009

E. 29 CFR 1910 - Occupational Safety and Health Standards; current edition.

F. ICC (IFC) - International Fire Code; 2012.

G. ICC (IBC) - International Building Code; 2015.

H. ICC (IMC) - International Mechanical Code; 2012.

I. ICC (IFGC) - International Fuel Gas Code; 2012.

J. ICC (IECC) - International Energy Conservation Code; 2012.

K. Illinois State Plumbing Code 2014.

L. NFPA 13/13R 2010 Standard for the Installation of Sprinkler Systems

M. NFPA 72 2010 National Fire Alarm Code

N. National Electric Code 2014

1.2. RELATED REQUIREMENTS

A. Section 01 4000 - Quality Requirements.

1.3. QUALITY ASSURANCE

A. Contractor's Designer Qualifications: Refer to Section - 01 4000 - Quality Requirements.

PART 2 PRODUCTS - NOT USED

PART 3 EXECUTION - NOT USED

END OF SECTION

TEMPORARY FACILITIES AND CONTROLS

PART 1 GENERAL

1.01 TEMPORARY ELECTRICAL ENERGY

A. Temporary electrical energy is not required for this work.

1.02 WATER FOR CONSTRUCTION WORK

A. Water for construction purposes is available at the site and shall be paid for by the Owner. Contractors shall arrange for their own distribution. Temporary distribution apparatus shall not be allowed to interfere with the normal functions of the Owner.

1.03 TEMPORARY SANITARY FACILITIES

A. Toilet facilities in the existing buildings may be used by Contractor's personnel during performance of the work. Coordinate the use of existing toilet facilities with the building officials.

B. Maintain toilet facilities used by Contractor's personnel in a clean and sanitary condition.

END OF SECTION

SECTION 01 7000 - EXECUTION AND CLOSEOUT REQUIREMENTS

PART 1 GENERAL

1.1. SECTION INCLUDES

A. Examination, preparation, and general installation procedures.

B. Requirements for alterations work, including selective demolition.

C. Pre-installation meetings.

D. Cutting and patching.

E. Surveying for laying out the work.

F. Cleaning and protection.

G. Closeout procedures, including Contractor's Correction Punch List, except payment procedures.

H. General requirements for maintenance service.

1.2. REFERENCE STANDARDS

A. NFPA 241 - Standard for Safeguarding Construction, Alteration, and Demolition Operations; 2013.

1.3. SUBMITTALS

A. See Section 01 3000 - Administrative Requirements, for submittal procedures.

B. Survey work: Submit name, address, and telephone number of Surveyor before starting survey work.

1. On request, submit documentation verifying accuracy of survey work.

2. Submit a copy of site drawing signed by the Land Surveyor, that the elevations and locations of the work are in compliance with Contract Documents.

3. Submit surveys and survey logs for the project record.

C. Cutting and Patching: Submit written request in advance of cutting or alteration that affects:

1. Structural integrity of any element of Project.

2. Integrity of weather exposed or moisture resistant element.

3. Efficiency, maintenance, or safety of any operational element.

4. Visual qualities of sight exposed elements.

5. Work of Owner or separate Contractor.

D. Project Record Documents: Accurately record actual locations of capped and active utilities.

1.4. QUALIFICATIONS

A. For demolition work, employ a firm specializing in the type of work required.

1. Minimum of 10 years of documented experience.

B. For surveying work, employ a land surveyor registered in the State of Illinois and acceptable to General Contractor. Submit evidence of surveyor's Errors and Omissions insurance coverage in the form of an Insurance Certificate. Employ only individual(s) trained and experienced in collecting and recording accurate data relevant to ongoing construction activities,

C. For field engineering, employ a professional engineer of the discipline required for specific service on Project, licensed in the State of Illinois. Employ only individual(s) trained and experienced in establishing and maintaining horizontal and vertical control points necessary for laying out construction work on project of similar size, scope and/or complexity.

D. For design of temporary shoring and bracing, employ a Professional Engineer experienced in design of this type of work and licensed in the State of Illinois.

1.5. PROJECT CONDITIONS

A. Use of explosives is not permitted.

B. Grade site to drain. Maintain excavations free of water. Provide, operate, and maintain pumping equipment.

C. Protect site from puddling or running water. Provide water barriers as required to protect site from soil erosion.

D. Ventilate enclosed areas to assist cure of materials, to dissipate humidity, and to prevent accumulation of dust, fumes, vapors, or gases.

E. Dust Control: Execute work by methods to minimize raising dust from construction operations. Provide positive means to prevent air-borne dust from dispersing into atmosphere and over adjacent property.

1. Provide dust-proof enclosures to prevent entry of dust generated outdoors.

2. Provide dust-proof barriers between construction areas and areas continuing to be occupied by Owner.

F. Erosion and Sediment Control: Plan and execute work by methods to control surface drainage from cuts and fills, from borrow and waste disposal areas. Prevent erosion and sedimentation.

1. Minimize the amount of bare soil exposed at one time.

2. Provide temporary measures such as berms, dikes, and drains, to prevent water flow.

3. Construct fill and waste areas by selective placement to avoid erosive surface silts or clays.

4. Periodically inspect earthwork to detect evidence of erosion and sedimentation; promptly apply corrective measures.

G. Noise Control: Provide methods, means, and facilities to minimize noise produced by construction operations.

H. Pest and Rodent Control: Provide methods, means, and facilities to prevent pests and insects from damaging the work.

I. Rodent Control: Provide methods, means, and facilities to prevent rodents from accessing or invading premises.

J. Pollution Control: Provide methods, means, and facilities to prevent contamination of soil, water, and atmosphere from discharge of noxious, toxic substances, and pollutants produced by construction operations. Comply with federal, state, and local regulations.

1.6. COORDINATION

A. See Section 01 1000 for occupancy-related requirements.

B. Coordinate scheduling, submittals, and work of the various sections of the Project Manual to ensure efficient and orderly sequence of installation of interdependent construction elements, with provisions for accommodating items installed later.

C. Notify affected utility companies and comply with their requirements.

D. Verify that utility requirements and characteristics of new operating equipment are compatible with building utilities. Coordinate work of various sections having interdependent responsibilities for installing, connecting to, and placing in service, such equipment.

E. Coordinate space requirements, supports, and installation of mechanical and electrical work that are indicated

diagrammatically on drawings. Follow routing indicated for pipes, ducts, and conduit, as closely as practicable; place runs parallel with lines of building. Utilize spaces efficiently to maximize accessibility for other installations, for maintenance, and for repairs.

F. In finished areas except as otherwise indicated, conceal pipes, ducts, and wiring within the construction. Coordinate locations of fixtures and outlets with finish elements.

G. Coordinate completion and clean-up of work of separate sections.

H. After Owner occupancy of premises, coordinate access to site for correction of defective work and work not in accordance with Contract Documents, to minimize disruption of Owner's activities.

PART 2 PRODUCTS

2.1. PATCHING MATERIALS

A. New Materials: As specified in product sections; match specified products and work for patching and extending work.

B. Type and Quality of Existing Products: Determine by inspecting and testing products where necessary, referring to existing work as a standard.

PART 3 EXECUTION

3.1. EXAMINATION

A. Verify that existing site conditions and substrate surfaces are acceptable for subsequent work. Start of work means acceptance of existing conditions.

B. Verify that existing substrate is capable of structural support or attachment of new work being applied or attached.

C. Examine and verify specific conditions described in individual specification sections.

D. Take field measurements before confirming product orders or beginning fabrication, to minimize waste due to over-ordering or mis fabrication.

E. Verify that utility services are available, of the correct characteristics, and in the correct locations.

F. Prior to Cutting: Examine existing conditions prior to commencing work, including elements subject to damage or movement during cutting and patching. After uncovering existing work, assess conditions affecting performance of work. Beginning of cutting or patching means acceptance of existing conditions.

3.2. PREPARATION

A. Clean substrate surfaces prior to applying next material or substance.

B. Seal cracks or openings of substrate prior to applying next material or substance.

C. Apply manufacturer required or recommended substrate primer, sealer, or conditioner prior to applying any new material or substance in contact or bond.

3.3. PREINSTALLATION MEETINGS

A. When required in individual specification sections, convene a preinstallation meeting at the site prior to commencing work of the section.

B. Require attendance of parties directly affecting, or affected by, work of the specific section.

C. Notify General Contractor four days in advance of meeting date.

D. Prepare agenda and preside at meeting:

1. Review conditions of examination, preparation and installation procedures.
2. Review coordination with related work.

E. Record minutes and distribute copies within two days after meeting to participants, with two copies General Contractor, Owner, participants, and those affected by decisions made.

3.4. LAYING OUT THE WORK

A. Verify locations of survey control points prior to starting work.

B. Promptly notify General Contractor of any discrepancies discovered.

C. Contractor shall locate and protect survey control and reference points.

D. Protect survey control points prior to starting site work; preserve permanent reference points during construction.

E. Promptly report to General Contractor the loss or destruction of any reference point or relocation required because of changes in grades or other reasons.

F. Replace dislocated survey control points based on original survey control. Make no changes without prior written notice to General Contractor.

G. Utilize recognized engineering survey practices.

H. Establish elevations, lines and levels. Locate and lay out by instrumentation and similar appropriate means:

1. Site improvements including pavements; stakes for grading, fill and topsoil placement; utility locations, slopes, and invert elevations.
2. Grid or axis for structures.
3. Building foundation, column locations, ground floor elevations.

I. Periodically verify layouts by same means.

J. Maintain a complete and accurate log of control and survey work as it progresses.

3.5. GENERAL INSTALLATION REQUIREMENTS

A. Install products as specified in individual sections, in accordance with manufacturer's instructions and recommendations, and so as to avoid waste due to necessity for replacement.

B. Make vertical elements plumb and horizontal elements level, unless otherwise indicated.

C. Install equipment and fittings plumb and level, neatly aligned with adjacent vertical and horizontal lines, unless otherwise indicated.

D. Make consistent texture on surfaces, with seamless transitions, unless otherwise indicated.

E. Make neat transitions between different surfaces, maintaining texture and appearance.

3.6. ALTERATIONS

A. Drawings showing existing construction and utilities are based on casual field observation and existing record documents only.

1. Verify that construction and utility arrangements are as indicated.
2. Report discrepancies to General Contractor before disturbing existing installation.
3. Beginning of alterations work constitutes acceptance of existing conditions.

B. Keep areas in which alterations are being conducted separated from other areas that are still occupied.

1. Provide, erect, and maintain temporary dustproof partitions of construction specified in Section 015000 .

2. Provide sound retardant partitions of construction indicated on drawings in locations indicated on drawings.

C. Maintain weatherproof exterior building enclosure except for interruptions required for replacement or modifications; take care to prevent water and humidity damage.

1. Where openings in exterior enclosure exist, provide construction to make exterior enclosure weatherproof.

2. Insulate existing ducts or pipes that are exposed to outdoor ambient temperatures by alteration work.

D. Remove existing work as indicated and as required to accomplish new work.

1. Remove rotted wood, corroded metals, and deteriorated masonry and concrete; replace with new construction specified.

2. Remove items indicated on drawings.

3. Relocate items indicated on drawings.

4. Where new surface finishes are to be applied to existing work, perform removals, patch, and prepare existing surfaces as required to receive new finish; remove existing finish if necessary, for successful application of new finish.

5. Where new surface finishes are not specified or indicated, patch holes and damaged surfaces to match adjacent finished surfaces as closely as possible.

E. Services (Including but not limited to HVAC, Plumbing, Fire Protection, Electrical, Telecommunications, and____): Remove, relocate, and extend existing systems to accommodate new construction.

1. Maintain existing active systems that are to remain in operation; maintain access to equipment and operational components; if necessary, modify installation to allow access or provide access panel.

2. Where existing systems or equipment are not active and Contract Documents require reactivation, put back into operational condition; repair supply, distribution, and equipment as required.

3. Where existing active systems serve occupied facilities but are to be replaced with new services, maintain existing systems in service until new systems are complete and ready for service.

a. Disable existing systems only to make switchovers and connections; minimize duration of outages.

b. Provide temporary connections as required to maintain existing systems in service.

4. Verify that abandoned services serve only abandoned facilities.

5. Remove abandoned pipe, ducts, conduits, and equipment, including those above accessible ceilings; remove back to source of supply where possible, otherwise cap stub and tag with identification; patch holes left by removal using materials specified for new construction.

F. Protect existing work to remain.

1. Prevent movement of structure; provide shoring and bracing if necessary.

2. Perform cutting to accomplish removals neatly and as specified for cutting new work.

3. Repair adjacent construction and finishes damaged during removal work.

G. Adapt existing work to fit new work: Make as neat and smooth transition as possible.

1. When existing finished surfaces are cut so that a smooth transition with new work is not possible, terminate existing surface along a straight line at a natural line of division and make recommendation to General Contractor.

H. Patching: Where the existing surface is not indicated to be refinished, patch to match the surface finish that existed prior to cutting. Where the surface is indicated to be refinished, patch so that the substrate is ready for the new

finish.

I. Refinish existing surfaces as indicated:

1. Where rooms or spaces are indicated to be refinished, refinish all visible existing surfaces to remain to the specified condition for each material, with a neat transition to adjacent finishes.

2. If mechanical or electrical work is exposed accidentally during the work, re-cover and refinish to match.

J. Clean existing systems and equipment.

K. Remove demolition debris and abandoned items from alterations areas and dispose of off-site; do not burn or bury.

L. Do not begin new construction in alterations areas before demolition is complete.

M. Comply with all other applicable requirements of this section.

3.7. CUTTING AND PATCHING

A. Whenever possible, execute the work by methods that avoid cutting or patching.

B. See Alterations article above for additional requirements.

C. Perform whatever cutting and patching is necessary to:

1. Complete the work.

2. Fit products together to integrate with other work.

3. Provide openings for penetration of mechanical, electrical, and other services.

4. Match work that has been cut to adjacent work.

5. Repair areas adjacent to cuts to required condition.

6. Repair new work damaged by subsequent work.

7. Remove samples of installed work for testing when requested.

8. Remove and replace defective and non-complying work.

D. Execute work by methods that avoid damage to other work and that will provide appropriate surfaces to receive patching and finishing. In existing work, minimize damage and restore to original condition.

E. Employ original installer to perform cutting for weather exposed and moisture resistant elements, and sight exposed surfaces.

F. Cut rigid materials using masonry saw or core drill. Pneumatic tools not allowed without prior approval.

G. Restore work with new products in accordance with requirements of Contract Documents.

H. Fit work air tight to pipes, sleeves, ducts, conduit, and other penetrations through surfaces.

I. At penetrations of fire rated walls, partitions, ceiling, or floor construction, completely seal voids with fire rated material in accordance with Section 07 8400, to full thickness of the penetrated element.

J. Patching:

1. Finish patched surfaces to match finish that existed prior to patching. On continuous surfaces, refinish to nearest intersection or natural break. For an assembly, refinish entire unit.

2. Match color, texture, and appearance.

3. Repair patched surfaces that are damaged, lifted, discolored, or showing other imperfections due to patching

work. If defects are due to condition of substrate, repair substrate prior to repairing finish.

3.8. PROGRESS CLEANING

A. Maintain areas free of waste materials, debris, and rubbish. Maintain site in a clean and orderly condition.

B. Remove debris and rubbish from pipe chases, plenums, attics, crawl spaces, and other closed or remote spaces, prior to enclosing the space.

C. Broom and vacuum clean interior areas prior to start of surface finishing and continue cleaning to eliminate dust.

D. Collect and remove waste materials, debris, and trash/rubbish from site periodically and dispose off-site; do not burn or bury.

3.9. PROTECTION OF INSTALLED WORK

A. Protect installed work from damage by construction operations.

B. Provide special protection where specified in individual specification sections.

C. Provide temporary and removable protection for installed products. Control activity in immediate work area to prevent damage.

D. Provide protective coverings at walls, projections, jambs, sills, and soffits of openings.

E. Protect finished floors, stairs, and other surfaces from traffic, dirt, wear, damage, or movement of heavy objects, by protecting with durable sheet materials.

F. Prohibit traffic or storage upon waterproofed or roofed surfaces. If traffic or activity is necessary, obtain recommendations for protection from waterproofing or roofing material manufacturer.

G. Prohibit traffic from landscaped areas.

H. Remove protective coverings when no longer needed; reuse or recycle coverings if possible.

3.10. ADJUSTING

A. Adjust operating products and equipment to ensure smooth and unhindered operation.

3.11. FINAL CLEANING

A. Use cleaning materials that are nonhazardous.

B. Clean interior and exterior glass, surfaces exposed to view; remove temporary labels, stains and foreign substances, polish transparent and glossy surfaces, vacuum carpeted and soft surfaces.

C. Remove all labels that are not permanent. Do not paint or otherwise cover fire test labels or nameplates on mechanical and electrical equipment.

D. Clean equipment and fixtures to a sanitary condition with cleaning materials appropriate to the surface and material being cleaned.

E. Clean filters of operating equipment.

F. Clean debris from roofs, gutters, downspouts, scuppers, overflow drains, area drains, and drainage systems.

G. Clean site; sweep paved areas, rake clean landscaped surfaces.

H. Remove waste, surplus materials, trash/rubbish, and construction facilities from the site; dispose of illegal manner; do not burn or bury.

3.12. CLOSEOUT PROCEDURES

A. Make submittals that are required by governing or other authorities.

B. Accompany Project Coordinator on preliminary inspection to determine items to be listed for completion or correction in the Contractor's Correction Punch List for Contractor's Notice of Substantial Completion.

C. Notify General Contractor when work is considered ready for General Contractor's Substantial

Completion inspection. D. Submit written certification containing Contractor's Correction Punch List,

that Contract Documents
have been reviewed, work has been inspected, and that work is complete in accordance with Contract Documents and ready for General Contractor's Substantial Completion inspection.

E. Conduct Substantial Completion inspection and create Final Correction Punch List containing General Contractor's and Contractor's comprehensive list of items identified to be completed or corrected and submit to General Contractor.

F. Correct items of work listed in Final Correction Punch List and comply with requirements for access Owner-occupied areas.

G. Notify General Contractor when work is considered finally complete and ready for General Contractor substantial Completion final inspection.

H. Complete items of work determined by General Contractor listed in executed Certificate of Substantial Completion.

3.13. MAINTENANCE

A. Provide service and maintenance of components indicated in specification sections.

B. Maintenance Period: As indicated in specification sections or, if not indicated, not less than one year from the Date of Substantial Completion or the length of the specified warranty, whichever is longer.

C. Examine system components at a frequency consistent with reliable operation. Clean, adjust, and lubricate as required.

D. Include systematic examination, adjustment, and lubrication of components. Repair or replace parts whenever required. Use parts produced by the manufacturer of the original component.

E. Maintenance service shall not be assigned or transferred to any agent or subcontractor without prior written consent of the Owner.

END OF SECTION

SECTION 01 7419 - CONSTRUCTION WASTE MANAGEMENT AND DISPOSAL

PART 1 GENERAL

1.1. WASTE MANAGEMENT REQUIREMENTS

A. Owner requires that this project generate the least amount of trash and waste possible.

B. Employ processes that ensure the generation of as little waste as possible due to error, poor planning, breakage, mishandling, contamination, or other factors.

C. Minimize trash/waste disposal in landfills; reuse, salvage, or recycle as much waste as economically feasible.

D. Contractor shall submit periodic Waste Disposal Reports; all landfill disposal, recycling, salvage, and reuse must be reported regardless of to whom the cost or savings accrues; use the same units of measure on all reports.

E. Methods of trash/waste disposal that are not acceptable are:

1. Burning on the project site.

2. Burying on the project site.

3. Dumping or burying on other property, public or private.

4. Other illegal dumping or burying.

5. Incineration, either on- or off-site.

F. Regulatory Requirements: Contractor is responsible for knowing and complying with regulatory requirements, including but not limited to Federal, state and local requirements, pertaining to legal disposal of all construction and demolition waste materials.

1.2. DEFINITIONS

A. Clean: Untreated and unpainted; not contaminated with oils, solvents, caulk, or the like.

B. Construction and Demolition Waste: Solid wastes typically including building materials, packaging, trash, debris, and rubble resulting from construction, remodeling, repair and demolition operations.

C. Hazardous: Exhibiting the characteristics of hazardous substances, i.e., ignitibility, corrosivity, toxicity reactivity.

D. Nonhazardous: Exhibiting none of the characteristics of hazardous substances, i.e., ignitibility, corrosivity, toxicity, or reactivity.

E. Nontoxic: Neither immediately poisonous to humans nor poisonous after a long period of exposure.

F. Recyclable: The ability of a product or material to be recovered at the end of its life cycle and remanufactured into a new product for reuse by others.

G. Recycle: To remove a waste material from the project site to another site for remanufacture into a new product for reuse by others.

H. Recycling: The process of sorting, cleansing, treating and reconstituting solid waste and other discarded materials for the purpose of using the altered form. Recycling does not include burning, incinerating, or thermally destroying waste.

I. Return: To give back reusable items or unused products to vendors for credit.

J. Reuse: To reuse a construction waste material in some manner on the project site.

K. Salvage: To remove a waste material from the project site to another site for resale or reuse by others.

L. Sediment: Soil and other debris that has been eroded and transported by storm or well production run-off water.

M. Source Separation: The act of keeping different types of waste materials separate beginning from the first time they become waste.

N. Toxic: Poisonous to humans either immediately or after a long period of exposure.

O. Trash: Any product or material unable to be reused, returned, recycled, or salvaged.

P. Waste: Extra material or material that has reached the end of its useful life in its intended use. Waste includes salvageable, returnable, recyclable, and reusable material.

1.3. SUBMITTALS

A. See Section 01 3000 - Administrative Requirements, for submittal procedures.

B. Waste Disposal Reports: Submit at specified intervals, with details of quantities of trash and waste, means of disposal or reuse, and costs; show both totals to date and since last report.

1. Submit updated Report with each Application for Progress Payment; failure to submit Report will delay payment.

2. Submit Report on a form acceptable to Owner.

3. Landfill Disposal: Include the following information:

a. Identification of material.

b. Amount, in tons or cubic yards (cubic meters), of trash/waste material from the project disposed of in landfills.

c. State the identity of landfills, total amount of tipping fees paid to landfill, and total disposal cost.

d. Include manifests, weight tickets, receipts, and invoices as evidence of quantity and cost.

4. Recycled and Salvaged Materials: Include the following information for each:

a. Identification of material, including those retrieved by installer for use on other projects.

b. Amount, in tons or cubic yards (cubic meters), date removed from the project site, and receiving party.

c. Transportation cost, amount paid or received for the material, and the net total cost or savings of salvage or recycling each material.

d. Include manifests, weight tickets, receipts, and invoices as evidence of quantity and cost.

e. Certification by receiving party that materials will not be disposed of in landfills or by incineration.

5. Material Reused on Project: Include the following information for each:

a. Identification of material and how it was used in the project.

b. Amount, in tons or cubic yards (cubic meters).

c. Include weight tickets as evidence of quantity.

6. Other Disposal Methods: Include information similar to that described above, as appropriate to disposal method.

PART 2 PRODUCTS

2.1. PRODUCT SUBSTITUTIONS

A. See Section 01 6000 - Product Requirements for substitution submission procedures.

PART 3 EXECUTION

3.1. WASTE MANAGEMENT PROCEDURES

A. See Section 01 3000 for additional requirements for project meetings, reports, submittal procedures, and project documentation.

B. See Section 01 5000 for additional requirements related to trash/waste collection and removal facilities and services.

C. See Section 01 6000 for waste prevention requirements related to delivery, storage, and handling.

D. See Section for trash/waste prevention procedures related to demolition, cutting and patching, installation, protection, and cleaning.

3.2. WASTE MANAGEMENT PLAN IMPLEMENTATION

A. Manager: Designate an on-site person or persons responsible for instructing workers and overseeing and documenting results of the Waste Management Plan.

B. Communication: Distribute copies of the Waste Management Plan to job site foreman, each subcontractor, and Owner.

C. Instruction: Provide on-site instruction of appropriate separation, handling, and recycling, salvage, reuse, and return methods to be used by all parties at the appropriate stages of the project.

D. Meetings: Discuss trash/waste management goals and issues at project meetings.

1. Prebid meeting.

2. Preconstruction meeting.

3. Regular job-site meetings.

4. Job safety meetings.

E. Facilities: Provide specific facilities for separation and storage of materials for recycling, salvage, reuse, return, and trash disposal, for use by all contractors and installers.

1. As a minimum, provide:
   a. Separate area for storage of materials to be reused on-site, such as wood cut-offs for blocking.
   b. Separate dumpsters for each category of recyclable.
   c. Recycling bins at worker lunch area.

2. Provide containers as required.

3. Provide adequate space for pick-up and delivery and convenience to subcontractors.

4. Keep recycling and trash/waste bin areas neat and clean and clearly marked in order to avoid contamination of materials.

F. Hazardous Wastes: Separate, store, and dispose of hazardous wastes according to applicable regulations.

G. Recycling: Separate, store, protect, and handle at the site identified recyclable waste products in order to prevent contamination of materials and to maximize recyclability of identified materials. Arrange for timely pickups from the site or deliveries to recycling facility in order to prevent contamination of recyclable materials.

H. Reuse of Materials On-Site: Set aside, sort, and protect separated products in preparation for reuse.

I. Salvage: Set aside, sort, and protect products to be salvaged for reuse off-site.

END OF SECTION

SECTION 01 7800 - CLOSEOUT SUBMITTALS

PART 1 GENERAL

1.1. SECTION INCLUDES

A. Project Record Documents.

B. Operation and Maintenance Data.

C. Warranties and bonds.

1.2. RELATED REQUIREMENTS

A. Section 01 3000 - Administrative Requirements: Submittals procedures, shop drawings, product data, and samples.

B. Individual Product Sections: Specific requirements for operation and maintenance data.

C. Individual Product Sections: Warranties required for specific products or Work.

1.3. SUBMITTALS

A. Project Record Documents: Submit documents to General Contractor with claim for final Application for Payment.

B. Operation and Maintenance Data:

1. Submit two copies of preliminary draft or proposed formats and outlines of contents before start of Work. General Contractor will review draft and return one copy with comments.

2. For equipment, or component parts of equipment put into service during construction and operated by Owner, submit completed documents within ten days after acceptance.

3. Submit one copy of completed documents 15 days prior to final inspection. This copy will be reviewed and returned after final inspection, with General Contractor comments. Revise content of all document sets as required prior to final submission.

4. Submit two sets of revised final documents in final form within 10 days after final inspection.

C. Warranties and Bonds:

1. For equipment or component parts of equipment put into service during construction with Owner's permission, submit documents within 10 days after acceptance.

2. Make other submittals within 10 days after Date of Substantial Completion, prior to final Application for Payment.

3. For items of Work for which acceptance is delayed beyond Date of Substantial Completion, submit within 10 days after acceptance, listing the date of acceptance as the beginning of the warranty period.

PART 2 PRODUCTS - NOT USED

PART 3 EXECUTION

3.1. PROJECT RECORD DOCUMENTS

A. Maintain on site one set of the following record documents; record actual revisions to the Work:

1. Drawings.
2. Specifications.
3. Addenda.
4. Change Orders and other modifications to the Contract.
5. Reviewed shop drawings, product data, and samples.
6. Manufacturer's instruction for assembly, installation, and adjusting.

B. Ensure entries are complete and accurate, enabling future reference by Owner.

C. Store record documents separate from documents used for construction.

D. Record information concurrent with construction progress.

E. Specifications: Legibly mark and record at each product section description of actual products installed, including the following:

1. Manufacturer's name and product model and number.
2. Changes made by Addenda and modifications.

F. Record Drawings and Shop Drawings: Legibly mark each item to record actual construction including:

1. Measured depths of foundations in relation to finish first floor datum.
2. Measured horizontal and vertical locations of underground utilities and appurtenances, reference to permanent surface improvements.
3. Measured locations of internal utilities and appurtenances concealed in construction, referenced to visible and accessible features of the Work.
4. Field changes of dimension and detail.
5. Details not on original Contract drawings.

3.2. OPERATION AND MAINTENANCE DATA

A. Source Data: For each product or system, list names, addresses and telephone numbers of Subcontractors and suppliers, including local source of supplies and replacement parts.

B. Product Data: Mark each sheet to clearly identify specific products and component parts, and data applicable to installation. Delete inapplicable information.

C. Drawings: Supplement product data to illustrate relations of component parts of equipment and systems, to show control and flow diagrams. Do not use Project Record Documents as maintenance drawings.

D. Typed Text: As required to supplement product data. Provide logical sequence of instructions for each procedure, incorporating manufacturer's instructions.

3.3. OPERATION AND MAINTENANCE DATA FOR MATERIALS AND FINISHES

A. For Each Product, Applied Material, and Finish:

1. Product data, with catalog number, size, composition, and color and texture designations.

2. Information for re-ordering custom manufactured products.

B. Instructions for Care and Maintenance: Manufacturer's recommendations for cleaning agents and methods, precautions against detrimental cleaning agents and methods, and recommended schedule for cleaning and maintenance.

C. Moisture protection and weather-exposed products: Include product data listing applicable reference standards, chemical composition, and details of installation. Provide recommendations for inspections, maintenance, and repair.

D. Additional information as specified in individual product specification sections.

E. Where additional instructions are required, beyond the manufacturer's standard printed instructions, have instructions prepared by personnel experienced in the operation and maintenance of the specific products.

3.4. OPERATION AND MAINTENANCE DATA FOR EQUIPMENT AND SYSTEMS

A. For Each Item of Equipment and Each System:

1. Description of unit or system, and component parts.

2. Identify function, normal operating characteristics, and limiting conditions.

3. Include performance curves, with engineering data and tests.

4. Complete nomenclature and model number of replaceable parts.

B. Where additional instructions are required, beyond the manufacturer's standard printed instructions, have instructions prepared by personnel experienced in the operation and maintenance of the specific products.

C. Panelboard Circuit Directories: Provide electrical service characteristics, controls, and communications; typed.

D. Include color coded wiring diagrams as installed.

E. Operating Procedures: Include start-up, break-in, and routine normal operating instructions and sequences. Include regulation, control, stopping, shut-down, and emergency instructions. Include summer, winter, and any special operating instructions.

F. Maintenance Requirements: Include routine procedures and guide for preventative maintenance and trouble shooting; disassembly, repair, and reassembly instructions; and alignment, adjusting, balancing, and checking instructions.

G. Provide servicing and lubrication schedule, and list of lubricants required.

H. Include manufacturer's printed operation and maintenance instructions.

I. Include sequence of operation by controls manufacturer.

J. Provide original manufacturer's parts list, illustrations, assembly drawings, and diagrams required for maintenance.

K. Provide control diagrams by controls manufacturer as installed.

L. Provide Contractor's coordination drawings, with color coded piping diagrams as installed.

M. Provide charts of valve tag numbers, with location and function of each valve, keyed to flow and control diagrams.

N. Provide list of original manufacturer's spare parts, current prices, and recommended quantities to be maintained in storage.

O. Include test and balancing reports.

P. Additional Requirements: As specified in individual product specification sections.

3.5. ASSEMBLY OF OPERATION AND MAINTENANCE MANUALS

A. Assemble operation and maintenance data into durable manuals for Owner's personnel use, with data arranged in the same sequence as, and identified by, the specification sections.

B. Where systems involve more than one specification section, provide separate tabbed divider for each system.

C. Binders: Commercial quality, 8-1/2 by 11 inch (216 by 280 mm) three D side ring binders with durable plastic covers; 2 inch (50 mm) maximum ring size. When multiple binders are used, correlate data into related consistent groupings.

D. Cover: Identify each binder with typed or printed title OPERATION AND MAINTENANCE INSTRUCTIONS; identify title of Project; identify subject matter of contents.

E. Project Directory: Title and address of Project; names, addresses, and telephone numbers of General Contractor, Consultants, Contractor and subcontractors, with names of responsible parties.

F. Tables of Contents: List every item separated by a divider, using the same identification as on the divider tab; where multiple volumes are required, include all volumes Tables of Contents in each volume, with the current volume clearly identified.

G. Dividers: Provide tabbed dividers for each separate product and system; identify the contents on the divider tab; immediately following the divider tab include a description of product and major component parts of equipment.

H. Text: Manufacturer's printed data, or typewritten data on 20 pound paper.

I. Drawings: Provide with reinforced punched binder tab. Bind in with text; fold larger drawings to size of text pages.

J. Arrangement of Contents: Organize each volume in parts as follows:

1. Project Directory.

2. Table of Contents, of all volumes, and of this volume.

3. Operation and Maintenance Data: Arranged by system, then by product category.

a. Source data.
b. Operation and maintenance data.

c. Field quality control data.

d. Photocopies of warranties and bonds.

3.6. WARRANTIES AND BONDS

A. Obtain warranties and bonds, executed in duplicate by responsible Subcontractors, suppliers, and manufacturers, within 10 days after completion of the applicable item of work. Except for items put into use with Owner's permission, leave date of beginning of time of warranty until Date of Substantial completion is determined.

B. Verify that documents are in proper form, contain full information, and are notarized.

C. Co-execute submittals when required.

D. Retain warranties and bonds until time specified for submittal.

E. Cover: Identify each binder with typed or printed title WARRANTIES AND BONDS, with title of Project; name, address and telephone number of Contractor and equipment supplier; and name of responsible company principal.

F. Table of Contents: Neatly typed, in the sequence of the Table of Contents of the Project Manual, with each item identified with the number and title of the specification section in which specified, and the name of product or work item.

G. Separate each warranty or bond with index tab sheets keyed to the Table of Contents listing. Provide full information, using separate typed sheets as necessary. List Subcontractor, supplier, and manufacturer, with name, address, and telephone number of responsible principal.

END OF SECTION

SECTION 01 7900 - DEMONSTRATION AND TRAINING

PART 1 GENERAL

1.1. SUMMARY

A. Demonstration of products and systems where indicated in specific specification sections.

B. Training of Owner personnel in care, cleaning, maintenance, and repair is required for:

1. Roofing, waterproofing, and other weather-exposed or moisture protection products.

2. Items specified in individual product Sections.

1.2. RELATED REQUIREMENTS

A. Section 01 7800 - Closeout Submittals: Operation and maintenance manuals.

B. Other Specification Sections: Additional requirements for demonstration and training.

1.3. SUBMITTALS

A. See Section 01 3000 - Administrative Requirements, for submittal procedures.

B. Training Plan: Owner will designate personnel to be trained; tailor training to needs and skill-level of attendees.

1. Submit to Owner.

2. Submit not less than two weeks prior to start of training.

3. Revise and resubmit until acceptable.

4. Provide an overall schedule showing all training sessions.

5. Include at least the following for each training session:

a. Identification, date, time, and duration.

b. Description of products and/or systems to be covered.

c. Name of firm and person conducting training; include qualifications.

d. Intended audience, such as job description.

e. Objectives of training and suggested methods of ensuring adequate training.

f. Methods to be used, such as classroom lecture, live demonstrations, hands-on, etc.

g. Media to be used, such as slides, hand-outs, etc.

h. Training equipment required, such as projector, projection screen, etc., to be provided by Contractor.

C. Training Manuals: Provide training manual for each attendee; allow for minimum of two attendees per training session.

1. Include applicable portion of O&M manuals.

2. Include copies of all hand-outs, slides, overheads, video presentations, etc., that are not included in O&M manuals.

3. Provide one extra copy of each training manual to be included with operation and maintenance data.

D. Training Reports:

1. Identification of each training session, date, time, and duration.

2. Sign-in sheet showing names and job titles of attendees.

3. List of attendee questions and written answers given, including copies of and references to supporting documentation required for clarification; include answers to questions that could not be answered in original training session.

1.4. QUALITY ASSURANCE

A. Instructor Qualifications: Familiar with design, operation, maintenance and troubleshooting of the relevant products and systems.

1. Provide as instructors the most qualified trainer of those contractors and/or installers who actually supplied and installed the systems and equipment.

2. Where a single person is not familiar with all aspects, provide specialists with necessary qualifications.

PART 2 PRODUCTS - NOT USED

PART 3 EXECUTION

3.1. DEMONSTRATION - GENERAL

A. Demonstrations conducted during system start-up do not qualify as demonstrations for the purposes of this section, unless approved in advance by Owner.

B. Demonstration may be combined with Owner personnel training if applicable.

C. Operating Equipment and Systems: Demonstrate operation in all modes, including start-up, shut-down, seasonal changeover, emergency conditions, and troubleshooting, and maintenance procedures, including scheduled and preventive maintenance.

1. Perform demonstrations not less than two weeks prior to Substantial Completion.

2. For equipment or systems requiring seasonal operation, perform demonstration for other season within six months.

D. Non-Operating Products: Demonstrate cleaning, scheduled and preventive maintenance, and repair procedures.

1. Perform demonstrations not less than two weeks prior to Substantial Completion.

3.2. TRAINING - GENERAL

A. Conduct training on-site unless otherwise indicated.

B. Owner will provide classroom and seating at no cost to Contractor.

C. Provide training in minimum two hour segments.

D. Training schedule will be subject to availability of Owner's personnel to be trained; re-schedule training sessions as required by Owner; once schedule has been approved by Owner failure to conduct sessions according to schedule will be cause for Owner to charge Contractor for personnel "show-up" time.

E. Review of Facility Policy on Operation and Maintenance Data: During training discuss:

1. The location of the O&M manuals and procedures for use and preservation; backup copies.

2. Typical contents and organization of all manuals, including explanatory information, system narratives, and product specific information.

3. Typical uses of the O&M manuals.

F. Product- and System-Specific Training:

1. Review the applicable O&M manuals.

2. For systems, provide an overview of system operation, design parameters and constraints, and operational strategies.

3. Review instructions for proper operation in all modes, including start-up, shut-down, seasonal changeover and emergency procedures, and for maintenance, including preventative maintenance.

4. Provide hands-on training on all operational modes possible and preventive maintenance.

5. Emphasize safe and proper operating requirements; discuss relevant health and safety issues and emergency procedures.

6. Discuss common troubleshooting problems and solutions.

7. Discuss any peculiarities of equipment installation or operation.

8. Discuss warranties and guarantees, including procedures necessary to avoid voiding coverage.

9. Review recommended tools and spare parts inventory suggestions of manufacturers.

10. Review spare parts and tools required to be furnished by Contractor.

11. Review spare parts suppliers and sources and procurement procedures.

G. Be prepared to answer questions raised by training attendees; if unable to answer during training session, provide written response within three days.

END OF SECTION

SECTION 02 4100 - DEMOLITION

PART 1 GENERAL

1.1. SECTION INCLUDES

A. Selective demolition of building elements for alteration purposes.

1.2. RELATED REQUIREMENTS

A. Section 01 5000 - Temporary Facilities and Controls: Site fences, security, protective barriers, and waste removal.

B. Section 01 7000 - Execution and Closeout Requirements: Project conditions; protection of benchmarks, survey control points, and existing construction to remain; reinstallation of removed products; temporary bracing and shoring.

1.3. REFERENCE STANDARDS

A. 29 CFR 1926 - U.S. Occupational Safety and Health Standards; current edition.

PART 2 PRODUCTS -- NOT USED PART

3 EXECUTION

3.1. GENERAL PROCEDURES AND PROJECT CONDITIONS

A. Comply with other requirements specified in Section 01 7000.

B. Comply with applicable codes and regulations for demolition operations and safety of adjacent structures and the public.

1. Obtain required permits.

2. Take precautions to prevent catastrophic or uncontrolled collapse of structures to be removed; do not allow worker or public access within range of potential collapse of unstable structures.

3. Provide, erect, and maintain temporary barriers and security devices.

4. Use physical barriers to prevent access to areas that could be hazardous to workers or the public.

5. Conduct operations to minimize effects on and interference with adjacent structures and occupants.

6. Do not close or obstruct roadways or sidewalks without permit.

7. Conduct operations to minimize obstruction of public and private entrances and exits; do not obstruct required exits at any time; protect persons using entrances and exits from removal operations.

8. Obtain written permission from owners of adjacent properties when demolition equipment will traverse, infringe upon or limit access to their property.

C. Do not begin removal until receipt of notification to proceed from Owner.

D. Protect existing structures and other elements that are not to be removed.

1. Provide bracing and shoring.

2. Prevent movement or settlement of adjacent structures.

3. Stop work immediately if adjacent structures appear to be in danger.

3.2. EXISTING UTILITIES

A. Coordinate work with utility companies; notify before starting work and comply with their requirements; obtain required permits.

B. Protect existing utilities to remain from damage.

C. Do not disrupt public utilities without permit from authority having jurisdiction.

D. Do not close, shut off, or disrupt existing life safety systems that are in use without at least 7 days prior written notification to Owner.

E. Do not close, shut off, or disrupt existing utility branches or take-offs that are in use without at least 3 days prior written notification to Owner.

F. Locate and mark utilities to remain; mark using highly visible tags or flags, with identification of utility type; protect from damage due to subsequent construction, using substantial barricades if necessary.

G. Remove exposed piping, valves, meters, equipment, supports, and foundations of disconnected and abandoned utilities.

3.3. SELECTIVE DEMOLITION FOR ALTERATIONS

A. Drawings showing existing construction and utilities are based on casual field observation and existing record documents only.

1. Verify that construction and utility arrangements are as indicated.

2. Report discrepancies to General Contractor before disturbing existing installation.

3. Beginning of demolition work constitutes acceptance of existing conditions that would be apparent upon examination prior to starting demolition.

B. Remove existing work as indicated and as required to accomplish new work.

1. Remove items indicated on drawings.

C. Protect existing work to remain.

1. Prevent movement of structure; provide shoring and bracing if necessary.

2. Perform cutting to accomplish removals neatly and as specified for cutting new work.

3. Repair adjacent construction and finishes damaged during removal work.

4. Patch as specified for patching new work.

3.4. DEBRIS AND WASTE REMOVAL

A. Remove debris, junk, and trash from site.

B. Leave site in clean condition, ready for subsequent work.

C. Clean up spillage and wind-blown debris from public and private lands.

END OF SECTION

SECTION 06 1000 - ROUGH CARPENTRY

PART 1 GENERAL

1.1. SECTION INCLUDES

A. Roofing nailers.

B. Roofing cant strips.

C. Preservative treated wood materials.

D. Concealed wood blocking, nailers, and supports.

1.2. REFERENCE STANDARDS

A. AWPA U1 - Use Category System: User Specification for Treated Wood; 2012.

B. PS 20 - American Softwood Lumber Standard; 2010.

PART 2 PRODUCTS

2.1. GENERAL REQUIREMENTS

A. Dimension Lumber: Comply with PS 20 and requirements of specified grading agencies.

1. If no species is specified, provide any species graded by the agency specified; if no grading agency is specified, provide lumber graded by any grading agency meeting the specified requirements.

2. Grading Agency: Any grading agency whose rules are approved by the Board of Review, American Lumber Standard Committee (www.alsc.org) and who provides grading service for the species and grade specified; provide lumber stamped with grade mark unless otherwise indicated.

B. Lumber fabricated from old growth timber is not permitted.

2.2. DIMENSION LUMBER FOR CONCEALED APPLICATIONS

A. Sizes: Nominal sizes as indicated on drawings, S4S.

B. Moisture Content: S-dry or MC19.

C. Miscellaneous Framing, Blocking, Nailers, Grounds, and Furring:

1. Lumber: S4S, No. 2 or Standard Grade.

2. Boards: Standard or No. 3.

2.3. ACCESSORIES

A. Fasteners and Anchors:

1. Metal and Finish: Stainless steel for high humidity and preservative-treated wood locations, unfinished steel elsewhere.

a. Provide stainless steel or other compatible finish where fasteners are used with treated wood.

2.4. FACTORY WOOD TREATMENT

A. Treated Lumber and Plywood: Comply with requirements of AWPA U1 - Use Category System for wood treatments determined by use categories, expected service conditions, and specific applications.

1. Preservative-Treated Wood: Provide lumber and plywood marked or stamped by an ALSC-accredited testing agency, certifying level and type of treatment in accordance with AWPA standards.

B. Preservative Treatment:

1. Preservative Pressure Treatment of Lumber Above Grade: AWPA U1, Use Category UC3B, Commodity Specification A using waterborne preservative.

a. Kiln dry lumber after treatment to maximum moisture content of 19 percent.

b. Treat lumber in contact with roofing, flashing, or waterproofing.

c. Treat lumber in contact with masonry or concrete.

PART 3 EXECUTION

3.1. INSTALLATION - GENERAL

A. Select material sizes to minimize waste.

B. Reuse scrap to the greatest extent possible; clearly separate scrap for use on site as accessory components, including: shims, bracing, and blocking.

C. Where treated wood is used on interior, provide temporary ventilation during and immediately after installation sufficient to remove indoor air contaminants.

3.2. BLOCKING, NAILERS, AND SUPPORTS

A. Provide framing and blocking members as indicated or as required to support finishes, fixtures, specialty items, and trim.

B. In framed assemblies that have concealed spaces, provide solid wood fire blocking as required by applicable local code, to close concealed draft openings between floors and between top story and roof/attic space; other material acceptable to code authorities may be used in lieu of solid wood blocking.

C. In metal stud walls, provide continuous blocking around door and window openings for anchorage of frames, securely attached to stud framing.

D. In walls, provide blocking attached to studs as backing and support for wall-mounted items, unless item can be securely fastened to two or more studs or other method of support is explicitly indicated.

E. Where ceiling-mounting is indicated, provide blocking and supplementary supports above ceiling, unless other method of support is explicitly indicated.

3.3. ROOF-RELATED CARPENTRY

A. Coordinate installation of roofing carpentry with deck construction, framing of roof openings, and roofing assembly installation.

3.4. CLEANING

A. Waste Disposal: Comply with the requirements of Section 01 7419 - Construction Waste Management

and Disposal.

1. Comply with applicable regulations.
2. Do not burn scrap on project site.
3. Do not burn scraps that have been pressure treated.
4. Do not send materials treated with pentachlorophenol, CCA, or ACA to co-generation facilities or "waste-to-energy" facilities.

B. Do not leave any wood, shavings, sawdust, etc. on the ground or buried in fill.

C. Prevent sawdust and wood shavings from entering the storm drainage system.

END OF SECTION

SECTION 070155 – PREPARATION FOR RE-ROOFING

PART 1 — GENERAL

1.1 RELATED DOCUMENTS

A. Drawings and general provisions of the Contract, including the Conditions of the Contract and Division 01 Specification Sections apply to this section.

1.2 SUMMARY

A. See Section 01110 Summary of Work for complete description.

B. Related Sections:

- Division 07 Sections.

1.3 MATERIALS OWNERSHIP

A. Except for items or materials indicated to be reused, reinstalled, or otherwise indicated to remain Owner's property, demolished materials become Contractor's property and shall be removed from Project site.

1.4 SUBMITTALS

A. Product Data: Provide manufacturer s technical product data for each type of roofing product specified. Include data substantiating that materials comply with specified requirements.

B. Documentation of Existing Conditions: Document existing conditions of adjoining construction and site improvements, including exterior and interior finish surfaces, that might be misconstrued as having been damaged by re-roofing operations. Submit before work begins. Use high-resolution digital photographs or video tape supplemented by written commentary for preparing reports.

1.5 QUALITY ASSURANCE

A. Regulatory Requirements: Comply with governing EPA notification regulations before beginning membrane roofing removal. Comply with hauling and disposal regulations of authorities having jurisdiction.

B. Manufacturer Qualifications: Company specializing in manufacturing the products specified in this Section with not less than 10 years documented experience and have ISO 9001 certification.

C. Installer Qualifications: Company specializing in modified bituminous roofing and authorized by roofing system manufacturer as qualified to install manufacturer's roofing materials.

D. Installer's Field Supervision: Maintain a full-time Supervisor/Foreman on job site during all phases of roofing work while roofing work is in progress. Maintain proper supervision of workmen.

E. Maintain a copy of the Contract Documents in the possession of the Supervisor/Foreman and on the roof at all times.

F. Source Limitations: Obtain all components of roof system from a single manufacturer. Secondary products that are required shall be recommended and approved in writing by the roofing system Manufacturer.

1. Upon request of the Owner, submit Manufacturer's written approval of secondary components in list form, signed by an authorized agent of the Manufacturer.

G. Source Quality Control: Manufacturer shall have in place a documented, standardized quality control program such as ISO-9001.

H. Regulatory Requirements: Comply with governing EPA notification regulations before beginning membrane roofing removal. Comply with hauling and disposal regulations of authorities having jurisdiction.

1.6 PRE-INSTALLATION CONFERENCE

A. Preliminary Re-roofing Conference: Convene a pre-roofing conference approximately two (2) weeks before scheduled commencement of reproofing installation and associated work.

B. Require attendance of installer of each component of associated work, installers of deck or substrate construction to receive roofing work, installers of rooftop units and other work in and around roofing which must precede or follow roofing work (including mechanical work if any), Architect, Owner, roofing system manufacturer s representative, and other representatives directly concerned with performance of the Work, including (where applicable) Owner s insurers, testing agencies and governing authorities. Objectives of conference include:

1. Review foreseeable methods and procedures related to re-roofing work.

2. Tour representative areas of roofing substrates (decks), inspect and discuss condition of substrate, roof drains, curbs, penetrations and other preparatory work performed by others.

3. Review structural loading limitations of deck and inspect deck for loss of flatness and for required attachment.

4. Review re-roofing system requirements (drawings, specifications and other contract documents).

5. Review required submittals both completed and yet to be completed.

6. Review and finalize construction schedule related to re-roofing work and verify availability of materials, installer s personnel, equipment and facilities needed to make progress and avoid delays.

7. Review required inspection, testing, certifying and material usage accounting procedures.

8. Review weather and forecasted weather conditions and procedures for coping with unfavorable conditions, including possibility of temporary roofing (if not mandatory requirement).

9. Record discussion of conference including decisions and agreements (or disagreements) reached and furnish copy of record to each party attending. If substantial disagreements exist at conclusion of conference, determine how disagreements will be resolved and set date for reconvening conference.

10. Review notification procedures for weather or non-working days.

1.7 PROJECT CONDITIONS

A. Owner will occupy building immediately below restoration area. Conduct restoration process so Owner's operations will not be disrupted. Provide Owner with not less than [72] hours' notice of activities that may affect Owner's operations.

B. Coordinate work activities daily with Owner so Owner implement protective dust or water leakage covers over sensitive equipment or furnishings, shut down HVAC and fire-alarm or -detection equipment if needed, and evacuate occupants from below the work area.

C. Before working over structurally-impaired areas of deck, notify Owner to evacuate occupants from below the affected area. Verify that occupants below the work area have been evacuated prior to proceeding with work over the impaired deck area.

D. Protect building to be re-roofed, adjacent buildings, walkways, site improvements, exterior plantings, and landscaping from damage or soiling from re-roofing operations.

E. Maintain access to existing walkways, corridors, and other adjacent occupied or used facilities.

F. Owner assumes no responsibility for condition of areas to be re-roofed. Conditions existing at time of inspection for bidding will be maintained by the Owner as far as practical.

G. Weather Condition Limitations: Do not apply roofing membrane or fluid applied roofing during inclement weather or when inclement weather is expected.

H. Proceed with roofing work only when existing and forecasted weather conditions permit unit of work to be installed in accordance with manufacturer s recommendations and warranty requirements.

1.8 WARRANTY

A. Upon completion of installation, and acceptance by the Owner the manufacturer will supply to the Owner the appropriate warranty. Refer to Division 07 Sections for specific warranty terms

B. Installer will submit a two (2) year warranty to the membrane manufacturer with a copy directly to Owner.

PART 2 — PRODUCTS

2.1 BASE SHEET ROOFING MATERIALS

A. SEE DIV 7 Roof System Specified.

B. Asphalt Primer: ASTM D41 if necessary.

2.2 RECOVER BOARDS

A. If required, same recover board installed must be used to match type and thickness.

2.3 RE-ROOFING MATERIALS

A. SEE DIV 7 Roof System Specified.

2.4 AUXILIARY RE-ROOFING MATERIALS

A. General: Auxiliary re-roofing preparation materials recommended by roofing system manufacturer for intended use and compatible with components of [existing and] new membrane roofing system.

PART 3 — EXECUTION

3.1 PREPARATION

A. Protect existing membrane roofing system that is indicated not to be re-roofed.

1. Existing Warranties: Remove, replace, patch, and repair materials and surfaces cut or damaged during re-roofing, by methods and with materials so as not to void existing roofing system warranty. Notify warrantor before proceeding.

2. Limit traffic and material storage to areas of existing roofing membrane that have been protected

3. Maintain temporary protection and leave in place until replacement roofing has been completed.

B. Coordinate with Owner to shut down air intake equipment in the vicinity of the Work. Cover air intake louvers before proceeding with re-roofing work that could affect indoor air quality or activate smoke detectors in the ductwork.

C. During removal operations, have sufficient and suitable materials on-site to facilitate rapid installation of temporary protection in the event of unexpected rain.

D. Maintain roof drains in functioning condition to ensure roof drainage at end of each workday. Prevent debris from entering or blocking roof drains and conductors. Use roof-drain plugs specifically designed for this purpose. Remove roof-drain plugs at end of each workday, when no work is taking place, or when rain is forecast.

1. If roof drains will be temporarily blocked or unserviceable due to roofing system removal or partial installation of new membrane roofing system, provide alternative drainage method to remove water and eliminate ponding. Do not permit water to enter into or under existing membrane roofing system components that are to remain.

E. Verify that rooftop utilities and service piping have been shut off before commencing Work

F. Verify that openings, curbs, pipes, conduit, sleeves, ducts, and other items which penetrate the roof are set solidly, and that cant strips, nailing strips, and reglets are set in place.

3.2 ROOFING DEMOLITION

A. General: Notify Owner each day of extent of roof tear-off proposed.

B. Roof Tear-Off : Remove existing roofing membrane and other membrane roofing system components down to the deck.

C. Bitumen and felts that are firmly bonded to concrete decks are permitted to remain if authorized and the felts are dry. Remove unadhered bitumen and felts and wet felts. (Only applicable for mopped on vapor barriers)

D. Remove excess asphalt from deck. A maximum of 15 lb/100 sq. ft. (0.72 kg/sq. m) of asphalt is permitted to remain on steel decks.

3.3 DECK PREPARATION

A. Inspect deck after tear-off of membrane roofing system.

1. Verify that substrate is visibly dry and free of moisture. Test for capillary moisture by plastic sheet method according to ASTM D4263 or by pouring 1 pint (0.5 L) of hot roofing asphalt on deck at start

of each day's work and at start of each roof area or plane. Do not proceed with roofing work if moisture condenses under the plastic sheet or if asphalt test sample foams or can be easily and cleanly stripped after cooling.

B. If deck surface is not suitable for receiving new roofing, or if structural integrity of deck is suspect, immediately notify Owner. Do not proceed with installation until directed by Owner.

3.5 ROOF RESTORATION PREPARATION

A. NOT APPLICABLE FOR 2026 Roof Replacement Project

3.7 FIELD QUALITY CONTROL

A. Perform field inspection and testing as required under provisions of Division 07 Section Common Work Results for Thermal and Moisture Protection.

B. Correct defects or irregularities discovered during field inspection.

C. Require attendance of roofing materials manufacturers' representatives at site during installation of the roofing system per Division 1 and Division 7 specifications.

3.8 CLEANING

A. Remove bitumen and adhesive drippings from all walls, windows, floors, ladders and finished surfaces.

B. In areas where finished surfaces are soiled by work of this Section, comply with the cleaning instructions of the manufacturer of surfaces.

C. Repair or replace defaced or disfigured finishes caused by work of this section.

3.9 CONSTRUCTION WASTE MANAGEMENT

A. Remove and properly dispose of waste products generated during maintenance procedures. Comply with requirements of authorities having jurisdiction

3.10 FINAL INSPECTION

A. Upon completion of roofing maintenance work, meet with Installer, installer of associated work, Owner, roofing system manufacturer's representative, and other representatives directly concerned with performance of roofing system.

B. Walk roof surface areas of the building, inspect perimeter building edges as well as flashing of roof penetrations, walls, curbs and other equipment. List all items requiring correction or completion and furnish copy of list to each party in attendance.

C. At the manufacturer's discretion a thermographic scan of the roof during final inspection may be performed to determine the presence of damp or wet materials installed. The thermographic scan shall be paid for by the Roofing Contractor, if wet insulation is found.

D. If core cuts verify the presence of damp or wet materials, the Contractor shall be required to replace the damaged areas at his own expense.

E. Repair or replace (as required) deteriorated or defective work discovered at time of inspection to a condition free of damage and deterioration at time of Substantial Completion and according to warranty requirements.

F. The Contractor shall notify the Owner upon completion of corrections.

G. Following the final inspection, acceptance will be made in writing by the material manufacturer.

END OF SECTION

SECTION 07 5500 – COLD PROCESS MODIFIED BITUMEN ROOFING

PART 1 GENERAL

1.1 WORK INCLUDES

A. Base Bid

1. Provide roofing specified in this section.

a. Furnish and install specified roofing and related components.

1) Two ply cold process modified bitumen roofing system
2) Roof Insulation
3) Cover Board
4) Base Sheet
5) Roof Edge System
6) Flashing System

b. Field Quality Control specified herein.

c. See Section 01110 Summary of Work for detailed scope of works.

1.2 RELATED WORK

A. Specified Elsewhere:

1. Section 01 7800 - Closeout Submittals
2. Section 06 1000 - Rough Carpentry
3. Section 07 0155 - Preparation for Re-Roofing Procedures

1.3 REFERENCES

A. ASTM D 451 - Standard Test Method for Sieve Analysis of Granular Mineral Surfacing for Asphalt Roofing Products.
B. ASTM D 1079 Standard Terminology Relating to Roofing, Waterproofing and Bituminous Materials.
C. ASTM D 4586 Standard Specification for Asphalt Roof Cement, Asbestos-Free.
D. ASTM D 6162 Standard Specification for Styrene Butadiene Styrene (SBS) Modified Bituminous Sheet Materials Using a Combination of Polyester and Glass Fiber Reinforcements.
E. ASTM D 6163 Standard Specification for Styrene Butadiene Styrene (SBS) Modified Bituminous Sheet Materials Using Glass Fiber Reinforcements.
F. ASTM E 108 - Standard Test Methods for Fire Test of Roof Coverings
G. Factory Mutual Research (FM): Roof Assembly Classifications.
H. National Roofing Contractors Association (NRCA): Roofing and Waterproofing Manual.
I. Sheet Metal and Air Conditioning Contractors National Association, Inc. (SMACNA) - Architectural Sheet Metal Manual.
J. Underwriters Laboratories, Inc. (UL): Fire Hazard Classifications.
K. ANSI-SPRI ES-1 Wind Design Standard for Edge Systems used with Low Slope Roofing Systems.
L. ASCE 7, Minimum Design Loads for Buildings and Other Structures
M. UL - Fire Resistance Directory.
N. FM Approvals - Roof Coverings.

1.4 PERFORMANCE REQUIREMENTS

A. Perform work in accordance with all federal, state, and local codes.

B. General: Provide installed roofing membrane and base flashing that remain watertight; do not permit the passage of water; and resist specified uplift pressures, thermally induced movement, and exposure to weather without failure

C. Material Compatibility: Provide roofing materials that are compatible with one another under conditions of service and application required, as demonstrated by roofing manufacturer based on testing and field experience.

D. Design Requirements:
1. Uniform Wind Uplift Load Capacity
a. Installed roof system shall withstand negative (uplift) design wind loading pressures complying with the following criteria.
1) Design Code: ASCE 7, Method 2 for Components and Cladding.
2) See attached Wind Up Lift Requirement documentation.

1.5 SUBMITTALS

A. Submit under provisions of Section 01 3300.

B. Product Data: For each type of product indicated.

C. Shop Drawings: For roofing system. Include plans, elevations, sections, details, and attachments to other work including:
1. Base flashings and membrane terminations
2. Tapered Insulation, including slopes.
3. Crickets, saddles, and tapered edge strips, including slopes.
4. Insulation fastening patterns for corner, perimeter, and field-of-roof locations.

D. Design Pressure Calculations: Submit design pressure calculations for the roof area in accordance with ASCE 7 and local Building Code requirements. Include a roof system attachment analysis report, certifying the system's compliance with applicable wind load requirements before Work begins. The report shall be signed and sealed by a Professional Engineer registered in the State of the Project who has provided roof system attachment analysis for not less than 5 consecutive years.

E. LEED Submittals: Provide documentation of how the requirements of Credit will be met:
1. List of proposed materials with recycled content. Indicate post-consumer recycled content and pre-consumer recycled content for each product having recycled content.
2. Product data and certification letter indicating percentages by weight of post-consumer and pre-consumer recycled content for products having recycled content.
3. Product reflectivity and emissivity criteria to qualify for one point under the LEED credit category, Credit 7.2, Landscape & Exterior Design to Reduce Heat Island - Roof.

F. Recycled or Bio-Based Materials: Provide third party certification through UL Environment of roof System membranes containing recycled or bio-based materials.

G. Manufacturer's Fire Compliance Certificate: Certify that the roof system furnished is approved by Underwriters Laboratories (UL) in accordance with ASTM E108, Class A for external fire and meets local or nationally recognized building codes.

H. Installer Certificates: Signed by roofing manufacturer certifying that Installer is approved, authorized, or licensed by manufacturer to install roofing system.

I. Manufacturer's Certificates: Provide to certify products meet or exceed specified requirements in "Performance Requirements" Article.

J. Product Test Reports: Submit test reports, prepared by an independent testing agency, for all modified bituminous sheet roofing, indicating compliance with ASTM D5147.

K. Warranties: Special warranties specified in this Section

L. Closeout Submittals: Provide manufacturer's maintenance instructions that include recommendations for periodic inspection and maintenance of all completed roofing work. Provide product warranty executed by the manufacturer. Assist in preparation and submittal of roof installation acceptance certification as may be necessary in connection with fire and extended coverage insurance on roofing and associated work.

1.6 QUALITY ASSURANCE

A. Perform Work in accordance with NRCA Roofing and Waterproofing Manual.

B. Manufacturer Qualifications: Company specializing in manufacturing products specified with documented ISO 9001 certification and minimum of twelve years of documented experience and must not have been in Chapter 11 bankruptcy during the last five years.

C. Installer Qualifications: Company specializing in performing Work of this section with minimum five years documented experience and a certified Pre-Approved Garland Contractor.

D. Installer's Field Supervision: Maintain a full-time Supervisor/Foreman on job site during all phases of roofing work while roofing work is in progress.

E. Product Certification: Provide manufacturer's certification that materials are manufactured in the United States and conform to requirements specified herein, are chemically and physically compatible with each other, and are suitable for inclusion within the total roof system specified herein.

F. Source Limitations: Obtain all components of roof system from a single manufacturer. Secondary products that are required shall be recommended and approved in writing by the roofing system Manufacturer. Upon request of the Architect or Owner, submit Manufacturer's written approval of secondary components in list form, signed by an authorized agent of the Manufacturer.

1.7 PRE-INSTALLATION MEETINGS

A. Owner and Manufacturer Rep will convene a pre-installation conference one week prior to commencing work of this Section. The conference shall be attended by all parties directly affecting work in this Section. Review conditions of installation, procedures, and coordination required with related work.

B. Review methods and procedures related to roofing installation, including manufacture’s written instructions.

C. Review and finalize construction schedule, and verify availability of materials, installers personnel, equipment, and facilities needed to make progress or avoid delays.

D. Review base flashings, special roofing details, roof drainage, penetrations, equipment curbs, and condition of other construction that affects roofing system.

E. Review governing regulations and requirements for insurance and certificates if applicable.

F. Review temporary protection requirements for roofing system during and after installation.

1.8 DELIVERY, STORAGE, AND HANDLING

A. Deliver and store products in manufacturer's unopened packaging with labels intact until ready for

installation.

B. Store all roofing materials in a dry place, on pallets or raised platforms, out of direct exposure to the elements until time of application. Store materials at least 4 inches above ground level and covered with "breathable" tarpaulins.

C. Stored in accordance with the instructions of the manufacturer prior to their application or installation. Store roll goods on end of roll and upright on a clean flat surface. No wet or damaged materials will be used in the application.

D. Store at room temperature wherever possible, until immediately prior to installing the roll. During winter, store materials in a heated location with a 50-degree F (10 degree C) minimum temperature, removed only as needed for immediate use. Keep materials away from open flame or welding sparks.

E. Avoid stockpiling materials on roofs without first obtaining acceptance from the Architect/Engineer.

F. Adhesive storage shall be between the range of above 50-degree F (10 degree C) and below 80-degree F (27 degree C). Area of storage shall be constructed for flammable storage.

1.9 PROJECT CONDITIONS

A. Maintain environmental conditions (temperature, humidity, and ventilation) within limits recommended by manufacturer for optimum results. Do not install products under environmental conditions outside the manufacturer’s absolute limits.

1.10 WARRANTY

A. Upon completion of the work, provide the Manufacturer's written and signed Edge-To-Edge NDL System Warranty, warranting that, if a leak develops in the roof during the term of this warranty, due either to defective material or defective workmanship by the installer, the manufacturer shall provide the Owner, at the Manufacturer's expense, with the labor and material necessary to return the defective area to a watertight condition including Garland Metal Components.
   1. Warranty Period:
      a. 30 years from date of acceptance.

B. The installer is to guarantee all work against defects in materials and workmanship for a period indicated following final acceptance of the Work.
   1. Warranty Period:
      a. 5 years from date of acceptance.

PART 2 PRODUCTS

2.1 MANUFACTURERS

A. Basis-of-Design Product: The roof system specified in this section is based upon the Garland Company, Inc. Subject to compliance with requirements, provide the named product.

B. **Lake Land College** is using the OMNIA Partners Government Purchasing Alliance program for Roofing Supplies and Related Products and Services, as priced by and awarded to Garland/DBS, Inc., resulting from the competitively solicited Sealed Bid # PW1925 issued by Racine County. The roofing installer is responsible for supplying the right quantity of these roofing materials to complete the **2026 Roof Replacement of Northwest Building and Webb Hall** project as detailed in this specification and is responsible for obtaining any additional materials that required to properly install the specified roofing systems at no additional charge to the Owner. All materials needed to complete this project that are not listed on the OMNIA Partners Government Purchasing List of Materials attachment provided in this specification, but that are required in this specification, must be supplied by the roofing installer and meet stated performance specification listed in this document.

2.2 COLD APPLIED 2-PLY ROOF SYSTEM

A. Base (Ply) and Flashing Base (Ply) Sheet: One ply bonded to the prepared substrate with Interply Adhesive:
1. 80 mil SBS (Styrene-Butadiene-Styrene) rubber modified roofing base sheet reinforced with a dual fiberglass reinforced scrim, performance requirements according to ASTM D 5147.
a. Tensile Strength, ASTM D 5147
1) 2 in/min. @ 73.4 +/- 3.6 deg. F MD 225 lbf/in XD 225 lbf/in
2) 50 mm/min. @ 23 +/- 2 deg. C MD 39.0 kN/m XD 39 kN/m
b. Tear Strength, ASTM D 5147
1) 2 in/min. @ 73.4 +/- 3.6 deg. F MD 300 lbf XD 300 lbf
2) 50 mm/min. @ 23 +/- 2 deg. C MD 1335 N XD 1335 N
c. Elongation at Maximum Tensile, ASTM D 5147
1) 2 in/min. @ 73.4 +/- 3.6 deg. F MD 7% XD 7%
2) 50 mm/min. @ 23 +/- 2 deg. C MD 7% XD 7%
d. Low Temperature Flexibility, ASTM D 5147, Passes -30 deg. F (-34.4 deg. C

B. Modified Cap & Flashing (Ply) Sheet: One ply bonded to the prepared substrate with Interply Adhesive:
1. 160 mil SBS-smog reducing mineral surfaced rubber modified roofing membrane with fire retardant characteristics and reinforced with a dual fiberglass scrim and polyester scrim. Performance Requirements according to ASTM D 6162, Type III Grade G.
a. Tensile Strength, ASTM D 5147
1) 2 in/min. @ 73.4 +/- 3.6 deg. F MD 550 lbf/in XD 500 lbf/in
2) 50 mm/min. @ 23 +/- 2 deg. C MD 96.25 kN/m XD 87.5 kN/m
b. Tear Strength, ASTM D 5147
1) 2 in/min. @ 73.4 +/- 3.6 deg. F MD 575 lbf XD 570 lbf
2) 50 mm/min. @ 23 +/- 2 deg. C MD 2557 N XD 2535 N
c. Elongation at Maximum Tensile, ASTM D 5147
1) 2 in/min. @ 73.4 +/- 3.6 deg. F MD 10.0% XD 10.0%
2) 50 mm/min. @ 23 +/- 2 deg. C MD 10.0% XD 10.0%
d. Low Temperature Flexibility, ASTM D 5147, Passes -30 deg. F (-34 deg. C)

C. Interply Adhesive:
1. Rubberized, polymer modified cold process asphalt roofing bitumen V.O.C. compliant ASTM D 3019. Performance Requirements:
a. Non-Volatile Content ASTM D 4479 70%
b. Density ASTM D1475 8.9 lbs./gal.
c. Viscosity Stormer ASTM D562 400-500 grams
d. Flash Point ASTM D 93 100 deg. F min. (37 deg. C)
e. Slope: up to 3:12

D. Flashing Ply Adhesive:
1. Asphalt roofing mastic V.O.C. compliant, ASTM D 4586, Type II trowel grade flashing adhesive.
a. Non-Volatile Content ASTM D 4479 70 min.
b. Density ASTM D 1475 8.3 lbs./gal. (1kg/l)
c. Flash Point ASTM D 93 103 deg. F (39 deg. C)

2.3 ACCESSORIES:

A. Roof Insulation: In accordance with Section 07220.

B. Roof Insulation: Provide G-P Gypsum ½" DensDeck Prime recovery board.

2.4 Roofing Insulation

A. General: Provide preformed roof insulation boards that comply with requirements and referenced

standards, selected from manufacturer's standard sizes suitable for application, of thickness indicated. Thermal

Insulation Properties and Approved Insulation Boards.

1. Rigid Polyisocyanurate Roof Insulation; ASTM C1289:
   a. Qualities: Rigid, closed cell polyisocyanurate foam core bonded to heavy duty glass fiber mat facers.
   b. Thickness: Minimum [If tapered insulation is used then Roof should be average of r-30 based on IECC 2024" min. _]
   c. Compliances: UL, WH or FM listed under Roofing Systems
      Federal Specification HH-I-1972, Class 1.

2. Rigid Polyisocyanurate Roof Insulation; ASTM C1289:
   e. Qualities: Rigid, closed cell polyisocyanurate foam core bonded to heavy duty glass fiber mat facers.
   f. Thickness: Minimum [_2 layers of 2.6" as indicated. _]
   g. Compliances: UL, WH or FM listed under Roofing Systems
      Federal Specification HH-I-1972, Class 1.

3. Tapered Polyisocyanurate Roof Insulation; ASTM C1289:
   a. Qualities: Factory Tapered, closed cell polyisocyanurate foam core bonded to heavy duty glass fiber mat facers.
   b. Thickness: Minimum [_1/2" _]
   c. Tapered Slope: [_1/4 for tapered insulation as needed and1/2-12 for crickets and saddles]
   d. Compliances: UL, WH or FM listed under Roofing Systems Federal Specification HH-I-1972, Class 1

4. Dens-Deck Prime Roof Board
   a. Qualities: Nonstructural glass mat faced, noncombustible, water-resistant treated gypsum core panel.
   b. Board Size: Four feet by four feet (4'x4').
   c. Thickness: One half (1/2) inch.
   d. R-Value: .56
   e. Compliances: UL, WH or FM listed under Roofing Systems.

B. Provide preformed saddles, crickets, tapered edge strips, and other insulation shapes as needed for sloping to drain.

2.5 INSULATION ACCESSORIES

A. General: Roof insulation accessories recommended by insulation manufacturer for intended use and compatible with membrane roofing.

B. Fasteners: Factory-coated steel fasteners and metal or plastic plates complying with corrosion- resistance provisions in FM Global 4470, designed for fastening roof insulation to substrate, and acceptable to roofing system manufacturer.

C. Insulation Adhesive: Dual-component, high rise foam adhesive as recommended by insulation manufacturer and approved by FM indicated ratings.
   1. Tensile Strength (ASTM D412) ……250 psi
   2. Density (ASTM D1875).....8.5 lbs./gal.
   3. Viscosity (ASTM D2556) ……22,000 to 60,000 cP.
   4. 2 `Peel Strength (ASTM D903) ….17 lb/in.
   5. 3 `Flexibility (ASTM D816) ……Pass @ -70°F

D. Insulation Cant Strips: ASTM C 208, Type II, Grade 1, cellulosic-fiber insulation board.

E. Wood Nailer Strips: Comply with requirements in Division 6 Section "Rough Carpentry."

F. Tapered Edge Strips: ASTM C 208, Type II, Grade 1, cellulosic-fiber insulation board.

G. Saddles: Polyisocyanurate: ASTM C 1289, Type II, felt or glass-fiber mat facer on both major surfaces.

2.6 ROOF EDGE SYSTEM - COPING CAP

Coping Cap: Roofing Manufacturer's factory made, prefinished Coping System. Factory made, prefinished galvanized sheet with factory coping chairs.

1. General: Designed to meet ANSI/SPRI ES-1 Testing Requirements
2. Covers: 24-gauge galvanized steel. Provide manufacturer's corners and accessories as required. Miters, transitions, and end caps shall be factor welded watertight.

    a. Basis-of-Design: The Garland Company, R-Mer Edge Coping.
    b. Outer Face Height: [4" or 6", contractor responsible for proper face length when estimating job]
    c. Finish: Fluoropolymer (PVF2 – polyvinyl fluoride) resin finish coat.
    d. Color: As selected from manufacturer's set of standard, designer, or premium colors.

3. Anchorage: Coping Chairs supplied in 36" or 48" 16-gauge zinc-coated steel pre-slotted for fastening.

2.7 ROOF EDGE SYSTEM- FASCIA

A. Fascia: Roofing Manufacturer's factory made, prefinished free floating fascia system.

1. General: Designed to meet ANSI/SPRI ES-1 testing requirements.
2. Covers: 24-gauge galvanized steel. Provide manufacturer's corners and accessories as required. Miters, transitions, and end caps shall be factory welded watertight.

    a. Basis-of-Design: The Garland Company, R-Mer Force
    b. Face Height: [5.75", 7.25",8.75" or 10.25", contractor responsible for proper face length when estimating job]
    c. Fascia Extenders required beyond the dimensional coverage of the 10.25."
    d. Finish: Fluoropolymer (PVF2 – polyvinyl fluoride) resin finish coat.
    e. Color: As selected from manufacturer's set of standard, designer, or premium colors.

3. Anchorage: Base Frame of extruded aluminum supplied in 10' lengths and pre-slotted 6" o.c. for fastening.

2.8 ROOF EDGE SYSTEM – SHOP-FABRICATED SHEET METAL

Copings, Fascia, Counter Flashings, Gutters, Downspouts, and Metal Components, etc., shall be shop fabricated to configurations and forms in accordance with recognized ANSI/SPRI ES-1, SMACNA, and NCRA standards.

1. General: Designed to meet ANSI/SPRI ES-1 Testing Requirements
2. 22-gauge galvanized steel.

    a. Hem exposed edges.
    b. Angle bottom edges of exposed vertical surfaces to form drip.
    c. Lap corners with adjoining pieces fastened and set in sealant.

3. Basis-of-Design: The Garland Company, Flat Stock Metal.
4. Sheet Size: 4' x 10'
5. Finish: Fluoropolymer (PVF2 – polyvinyl fluoride) resin finish coat.
6. Color: As selected from manufacturer's set of standard, designer, or premium colors.

PART 3 EXECUTION

3.1 EXAMINATION

A. Do not begin installation until the substrates have been properly prepared.

B. Inspect and approve the deck condition, slopes and fastener backing if applicable, parapet walls, expansion joints, roof drains, stack vents, vent outlets, nailers and surfaces and elements.

C. Verify that work penetrating the roof deck, or which may otherwise affect the roofing, has been properly completed.

D. If substrate preparation and other conditions are the responsibility of another installer, notify Architect/Owner of unsatisfactory preparation before proceeding.

3.2 PREPARATION

A. General: Clean surfaces thoroughly prior to installation.
1. Prepare surfaces using the methods recommended by the manufacturer for achieving the best result for the substrate under the project conditions.
2. Fill substrate surface voids that are greater than 1/4 inch wide with an acceptable fill material.
3. The roof surface to receive roofing system shall be smooth, clean, free from loose gravel, dirt, and debris, dry and structurally sound. Wherever necessary, all surfaces to receive roofing materials shall be power broom and vacuumed to remove debris and loose matter prior to starting work.
4. Do not apply roofing during inclement weather. Do not apply roofing membrane to damp, frozen, dirty, or dusty surfaces.
5. Fasteners and plates for fastening components mechanically to the substrate shall provide a minimum pull-out capacity of 300 lbs. (136 k) per fastener. Base or ply sheets attached with cap nails require a minimum pullout capacity of 40 lb. per nail.
6. Prime decks where required, in accordance with the requirements and recommendations of the primer and deck manufacturer.

B. Metal Deck:
1. Fastening of the deck should comply with the anticipated live and dead loads pertaining to the building as well as applicable Code.
2. Steel decks shall be minimum 22-gauge factory galvanized or zinc alloy coated for protection against corrosion.
3. Suitable insulation shall be mechanically attached as recommended by the insulation manufacturer.
4. Decks shall comply with the gauge and span requirements in the current Factory Mutual FM Approval Guide and be installed in accordance with Loss Prevention Data Sheet 1-28 or specific FM approval.
5. When re-roofing over steel decks, surface corrosion shall be removed, and repairs to severely corroded areas made. Loose or inadequately secured decking shall be fastened, and irreparable or otherwise defective decking shall be replaced.

C. Re-Roofing Applications:
1. Remove existing roof flashings from curbs and parapet walls down to the surface of the roof. Remove existing flashings at roof drains and roof penetrations.
2. Remove all wet, deteriorated, blistered, or delaminated roofing membrane or insulation and fill in any low spots occurring as a result of removal work to create a smooth, even surface for application of new roof membranes.
3. Install new wood nailers as necessary to accommodate insulation/recovery board or new nailing patterns.
4. When mechanically attached, the fastening pattern for the insulation/recovery board shall be as recommended by the specific product manufacturer.
5. Re-roofing over coal tar pitch requires a mechanically attached recovery board or insulation and a base sheet prior to the application of roofing system.
6. Existing roof surfaces shall be primed as necessary with asphalt primer meeting ASTM D 41 and allowed to dry prior to installing the roofing system.

3.3 INSULATION APPLICATION

A. Install board insulation in accordance with manufacturer’s instructions. Cut insulation cleanly and accurately at roof breaks and protrusions to provide a smooth surface. Offset insulation joints 1’-0”. Insulation shall be butted together with no gaps greater than 1/4”.

B. Mechanically Fastened Insulation: Install each layer of insulation board and secure to deck using mechanical fasteners specifically designed and sized for fastening specified board-type roof insulation to deck type.

1. Fasten insulation according to requirements in manufacturer provided wind up lift calculations to resist uplift pressure at corners, perimeter, and field of roof.

C. Set cover boards in insulation adhesive where indicated, firmly pressing, and maintaining recover board in place. Install per roofing system manufacturer's written requirements to obtain the specified wind up lift requirements to maintain performance and warranty.

1. Apply approved insulation adhesive to underside, and immediately bond cover board to polyisocyanurate substrate.

D. Install tapered insulation, crickets, and saddles as indicated on drawings.

3.4 ROOF MEMBRANE INSTALLATION - GENERAL

A. Install modified bitumen membranes and flashings in accordance with manufacturer's instructions and with the recommendations provided by the National Roofing Contractors Association's Roofing & Waterproofing Manual, the Asphalt Roofing Manufacturers Association, and applicable codes.

B. General: Avoid installation of modified bitumen membranes at temperatures lower than 40-45 degrees F. When work at such temperatures unavoidable use the following precautions:
1. Take extra care during cold weather installation and when ambient temperatures are affected by wind or humidity, to ensure adequate bonding is achieved between the surfaces to be joined. Use extra care at material seam welds and where adhesion of the applied product to the appropriately prepared substrate as the substrate can be affected by such temperature constraints as well.
2. Unrolling of cold materials, under low ambient conditions must be avoided to prevent the likelihood of unnecessary stress cracking. Rolls must be at least 40 degrees F at the time of application. If the membrane roll becomes stiff or difficult to install, it must be replaced with roll from a heated storage area.

C. Commence installation of the roofing system at the lowest point of the roof (or roof area), working up the slope toward the highest point. Lap sheets shingle fashion to constantly shed water.

D. All slopes greater than 2:12 require back-nailing to prevent slippage of the ply sheets. Use ring or spiral-shank 1 inch cap nails, or screws and plates at a rate of 1 fastener per ply (including the membrane) at each insulation stop. Place insulation stops at 16 ft o.c. for slopes less than 3:12 and 4 feet o.c. for slopes greater than 3:12. On non-insulated systems, nail each ply directly into the deck at the rate specified above. When slope exceeds 2:12, install all plies parallel to the slope (strapping) to facilitate back nailing. Install 4 additional fasteners at the upper edge of the membrane when strapping the plies.

E. Coordinate installing roofing system components so insulation and roofing membrane sheets are not exposed to precipitation or left exposed at the end of the workday or when rain is forecast.

1. Provide 2 ply tie-offs at the end of each day's work to cover exposed roofing membrane and insulation with a SBS modified base sheet ensuring all edges are sealed properly.
2. Completion terminations and base flashings and provide temporary seals to prevent water from entering completed roof sections of roofing system.
3. Remove and discard temporary seals before beginning work on adjoining roofs.

3.5 INSTALLATION COLD APPLIED ROOF SYSTEM

A. Base Ply: Cut base ply sheets into 18-foot lengths and allow plies to relax before installing. Install base sheet in Interply Adhesive: applied at the rate required by the manufacturer. Shingle base sheets uniformly to achieve one ply throughout the prepared substrate. Shingle in proper direction to shed water on each large area of roofing.
1. Lap ply sheet ends 8 inches. Stagger end laps 12 inches minimum.
2. Solidly bond to the substrate and adjacent ply with specified cold adhesive at the rate of 2 to 2- 1/2 gallons per 100 square feet.
3. The roll must push a puddle of adhesive in front of it with adhesive slightly visible at all side laps. Use care to eliminate air entrapment under the membrane.
4. Install subsequent rolls of modified across the roof as above with a minimum of 4-inch side laps and 8-inch staggered end laps. Lay modified membrane in the same direction as the underlayers but the laps

shall not coincide with the laps of the base layers.

5. Extend plies 2 inches beyond top edges of cants at wall and projection bases.
6. Install base flashing ply to all perimeter and projection details.
7. Allow the one ply of base sheet to cure at least 30 minutes before installing the modified membrane. However, the modified membrane must be installed the same day as the base plies.

B. Modified Cap Ply(s): Cut cap ply sheets into 18-foot lengths and allow plies to relax before installing. Install interplay adhesive applied at the rate required by the manufacturer. Shingle sheets uniformly over the prepared substrate to achieve the number of plies specified. Shingle in proper direction to shed water on each large area of roofing.

1. Lap ply sheet ends 8 inches. Stagger end laps 12 inches minimum.
2. Solidly bond to the base layers with specified cold adhesive at the rate of 2 to 2-1/2 gallons per 100 square feet.
3. The roll must push a puddle of adhesive in front of it with adhesive slightly visible at all side laps. Care should be taken to eliminate air entrapment under the membrane.
4. Install subsequent rolls of modified across the roof as above with a minimum of 4-inch side laps and 8-inch staggered end laps. Lay modified membrane in the same direction as the underlayers but the laps shall not coincide with the laps of the base layers.
5. Allow cold adhesive to set for 5 to 10 minutes before installing the top layer of modified membrane.
6. Extend membrane 2 inches beyond top edge of all cants in full mopping of the cold adhesive as shown on the Drawings.

C. Fibrous Cant Strips: Provide non-combustible perlite or glass fiber cant strips at all wall/curb detail treatments where angle changes are greater than 45 degrees. Cant may be set in approved cold adhesives, hot asphalt or mechanically attached with approved plates and fasteners.

D. Wood Blocking, Nailers and Cant Strips: Provide wood blocking, nailers and cant strips as specified in Section 06114.

1. Provide nailers at all roof perimeters and penetrations for fastening membrane flashings and sheet metal components.
2. Wood nailers should match the height of any insulation, providing a smooth and even transition between flashing and insulation areas.
3. Nailer lengths should be spaced with a minimum 1/8-inch gap for expansion and contraction between each length or change of direction.
4. Nailers and flashings should be fastened in accordance with Factory Mutual "Loss Prevention Data Sheet 1- 49, Perimeter Flashing" and be designed to be capable of resisting a minimum force of 200 lbs./lineal foot in any direction.

E. Metal Work: Provide metal flashings, counter flashings, parapet coping caps and thru-wall flashings as specified in Section 075500. Install in accordance with the SMACNA "Architectural Sheet Metal Manual" or the NRCA Roofing Waterproofing manual.

F. Termination Bar: Provide a metal termination bar or approved top edge securement at the terminus of all flashing sheets at walls and curbs. Fasten the bar a minimum of 8 inches (203 mm) o/c to achieve constant compression. Provide suitable sealant at the top edge if required.

G. Flashing Base Ply: Install flashing sheets by the same application method used for the base ply.

1. Seal curb, wall, and parapet flashings with an application of mastic and mesh daily. Do not permit conditions to exist that will allow moisture to enter behind, around or under the roof or flashing membrane.
2. Prepare all walls, penetrations, expansion joints and where shown on the Drawings to be flashed with required primer at the rate of 100 square feet per gallon. Allow primer to dry tack free.
3. Adhere to the underlying base ply with specified flashing ply adhesive unless otherwise specified. Nail off at a minimum of 8 inches (203 mm) o.c. from the finished roof at all vertical surfaces.
4. Solidly adhere the entire flashing ply to the substrate. Secure the tops of all flashings that do not run up and over curb through termination bar fastened at 6 inches (152 mm) O.C. and sealed at top.

5. Seal all vertical laps of flashing ply with a three-course application of trowel-grade mastic and fiberglass mesh.
6. Coordinate counter flashing, cap flashings, expansion joints and similar work with modified bitumen roofing work as specified.
7. Coordinate roof accessories, miscellaneous sheet metal accessory items, including piping vents and other devices with the roofing system work.
8. Secure the top edge of the flashing sheet using a termination bar only when the wall surface above is waterproofed or nailed 4 inches on center and covered with an acceptable counter flashing.

H. Flashing Cap Ply:
1. Seal curb, wall, and parapet flashings with an application of mastic and mesh daily. Do not permit conditions to exist that will allow moisture to enter behind, around or under the roof or flashing membrane.
2. Prepare all walls, penetrations, expansion joints and where shown on the Drawings to be flashed with required primer at the rate of 100 square feet per gallon. Allow primer to dry tack free.
3. Adhere to the underlying base flashing ply with specified flashing ply adhesive unless otherwise specified. Nail off at a minimum of 8 inches (203 mm) o.c. from the finished roof at all vertical surfaces.
4. Coordinate counter flashing, cap flashings, expansion joints and similar work with modified bitumen roofing work as specified.
5. Coordinate roof accessories, miscellaneous sheet metal accessory items with the roofing system work.
6. All stripping shall be installed prior to flashing cap sheet installation.
7. Heat and scrape granules when welding or adhering at cut areas and seams to granular surfaces at all flashings.
8. Secure the top edge of the flashing sheet using a termination bar only when the wall surface above is waterproofed or nailed 4 inches on center and covered with an acceptable counter flashing.

I. Roof Walkways: Provide walkways in areas indicated on the Drawings. Install walkway pads as recommended and furnished by the membrane manufacturer set in approved adhesive to control foot traffic on roof top surface and provide a durable system compliant non-slip walkway Polymer-modified, reconstituted rubber pads with slip-resisting textured surface], manufactured as a traffic pad for foot traffic and acceptable to roofing system manufacturer, 1/2 inch thick and 3’ x 4’ in size.

3.6 CLEANING

A. Clean-up and remove daily from the site all wrappings, empty containers, paper, loose particles, and other debris resulting from these operations.

B. Remove asphalt markings from finished surfaces.

C. Repair or replace defaced or disfigured finishes caused by Work of this section.

3.7 PROTECTION

A. Provide traffic ways, erect barriers, fences, guards, rails, enclosures, chutes and the like to protect personnel, roofs and structures, vehicles, and utilities.

B. Protect exposed surfaces of finished walls with tarps to prevent damage.

C. Plywood for traffic ways required for material movement over existing roofs shall be not less than 5/8 inch (16 mm) thick.

D. In addition to the plywood listed above, an underlayment of minimum 1/2 inch (13 mm) recover board is required on new roofing.

E. Special permission shall be obtained from the Manufacturer before any traffic shall be permitted over the new roofing.

3.8 FIELD QUALITY CONTROL

A. At the completion of the roofing installation and associated work, meet with contractor, architect, installer, installer of associated work, owner, roofing system manufacturer’s representative, and other representatives directly concerned with performance of roofing system.

B. Walk roof surface areas of the building, inspect perimeter building edges as well as flashing of roof penetrations, walls, curbs, and other equipment. List all items requiring correction or completion and furnish copy of list to each party in attendance.

C. The roofing system manufacturer reserves the right to request a thermographic scan of the roof during final inspection to determine if any damp or wet materials have been installed. The thermographic scan shall be provided by the roofing contractor.

D. If core cuts or thermographic scan verify the presence of damp or wet materials, the roofing contractor shall be required to replace the damaged areas at his own expense.

E. Following the final inspection, provide written notice of acceptance of the installation from the roofing system manufacturer.

F. Immediately correct roof leakage during construction. If the contractor does not respond within twenty-four (24) hours, the owner may exercise the right to correct the Work under the terms of the Conditions of the Contract.

G. Roofer is responsible for verifying all core cut depths, flashing heights, drain heights, and insulation thickness that would cause insufficient NRCA roof practices to be followed.

H. If the contractor is 30 days past substantial completion due to lack of proper staffing the job, the owner has the right to take the remaining contract amount and hire another contractor to finish the job.

3.9 MANUFACTURERS INSPECTIONS

A. When the Project is in progress, a full-time employee of the roofing system manufacturer must provide the following:
1. Report progress and quality of the work as observed. Progress reports must be published on an online system as referenced in Section 1.4.
2. Provide periodic roofing installation inspections: Inspections must include photographic documentation of work in-progress and written statements of compliance with details/shop drawings.
3. Report to the architect in writing any failure or refusal of the contractor to correct unacceptable practices called to the contractor's attention.
4. Confirm after project completion that the manufacturer has observed no application procedures in conflict with the specifications other than those that may have been previously reported and corrected.
5. Field observations shall be performed by a Sales Representative employed full-time by the manufacturer and whose primary job description is to assist, inspect and approve membrane installations for the manufacturer.
6. Provide observation reports from the Sales Representative indicating procedures followed, weather conditions and any discrepancies found during inspection.
7. Provide a final report from the Sales Representative, certifying that the roofing system has been satisfactorily installed according to the project specifications, approved details, and good general roofing practice.

END OF SECTION

LAKE LAND COLLEGE
NORTH WEST BUILDING & WEBB HALL
ROOF REPLACEMENT Project 10-19-2026
5001 LAKE LAND BLVD., MATTOON, IL 61938

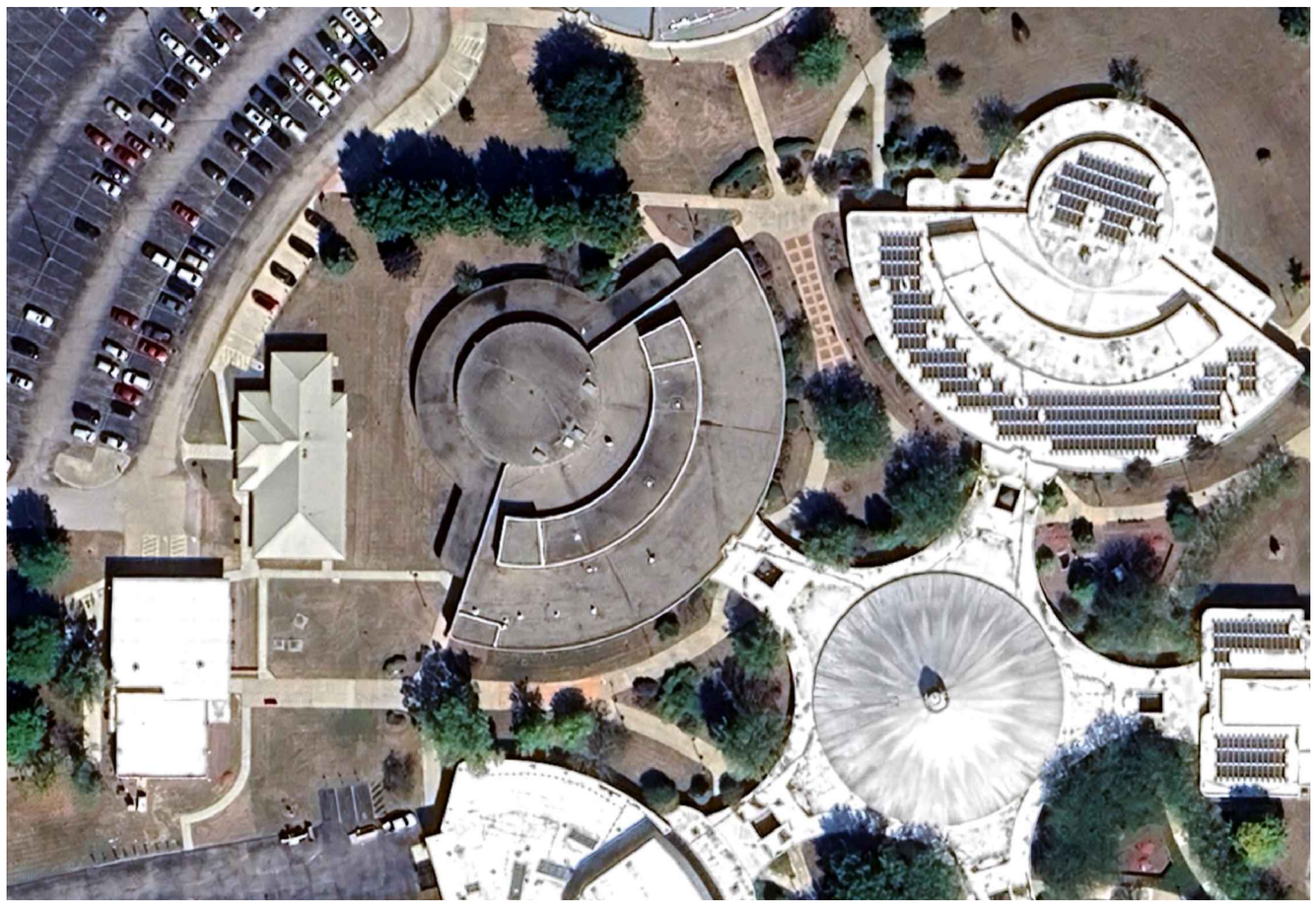

N

LOCATION MAP

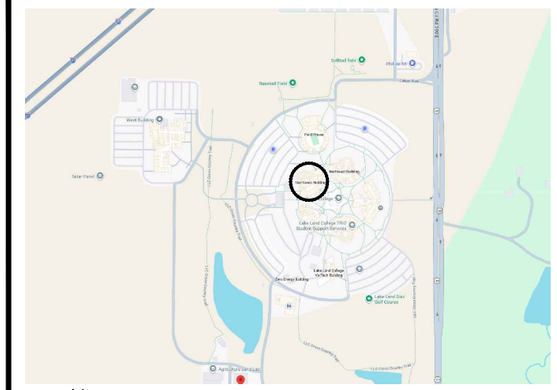

N

KEY PLAN

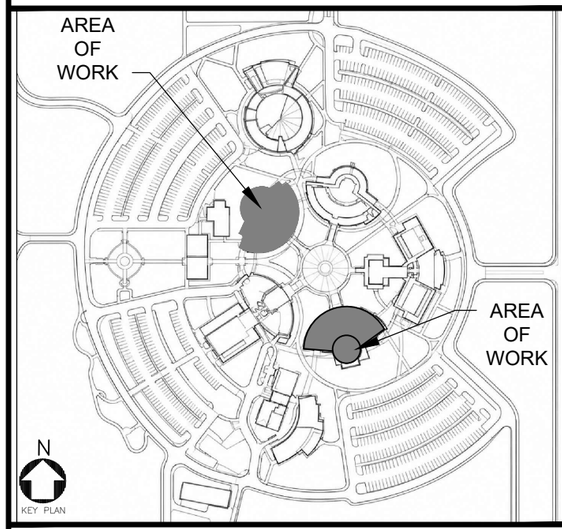

DRAWING INDEX

SHT 1 - COVER SHEET
SHT 2 - SCOPE OF WORK
SHT 3 - ROOF PLAN - NORTH WEST BLDG
SHT 4 - ROOF PLAN - WEBB HALL
SHT 5 - DETAILS
SHT 6 - DETAILS
SHT 7 - DETAILS
SHT 8 - DETAILS

LAKE LAND COLLEGE - NORTH WEST BUILDING & WEBB HALL
5001 LAKE LAND BLVD., MATTOON, IL 61938

PROJECT #: OSF_SJH1_2026 | ARCHITECT: | DATE: 10-19-26 | DWG BY: GK | CHK BY: RB

REVISION:

The Garland Company, Inc
3800 EAST 91st STREET - CLEVELAND, OHIO 44105-2197
PHONE (800) 321-9336 / FAX (216) 641-0633

since 1895

SHEET: 1 OF 8

SCOPE OF WORK NOTES

ROOF SECTIONS: ENTIRE BUIDLING (SEE LABELED DETAIL AERIAL MAP)
MINERAL MODIFIED BITUMEN ROOF REPLACEMENT: (METAL DECK STRUCTURALLY SLOPED)

1. REMOVE EXISTING ROOF DOWN TO DECK AND DISPOSE OF ACCORDING TO ALL LOCAL AND STATE GUIDELINES.
2. MECHANICALLY ATTACH 2 LAYERS OF 2.6” RIGID POLYISOCYANURATE PER WIND UPLIFT FOUND IN DRAWING, USING APPROVED WIND-UP LIFT REQUIREMENTS.
3. INSTALL ½” PRIMED DENS-DECK SET IN APPROVED INSULATION ADHESIVE PER WIND UP LIFT REQUIREMENTS.
4. INSTALL ½ -12 TAPERED CRICKETS AND SADDLES AS SHOWN ON DRAWINGS.
5. INSTALL MODIFIED SBS BASE SHEET SET IN COLD APPLIED ASPHALT AT 2.5 GAL PER SQUARE.
6. INSTALL MODIFIED MINERAL SBS CAP SHEET SET IN COLD APPLIED ASPHALT AT 2.5 GAL PER SQUARE AND HEAT WELD ALL FIELD AND FLASHING SEAMS.
7. FLASHINGS SHALL CONSIST OF:
   a. SBS MODIFIED BASE SHEET SET IN COLD APPLIED FLASHING ADHESIVE AT 5 GAL PER SQUARE.
   b. SBS MODIFIED MINERAL CAP SHEET SET IN COLD APPLIED FLASHING ADHESIVE AT 5 GAL PER SQUARE AND HEAT WELD ALL VERTICAL SEAMS.
   c. THREE-COURSE INSIDE AND OUTSIDE CORNERS OF CURBS AND WALLS WITH APPROVED FLASHING ADHESIVE AND MESH.
8. REPLACE CLAMPING RINGS AND STRAINERS ON DRAINS, MAKE SURE THEY ARE ALL PAINTED WITH RUSTOLEUM FIRE ENGINE RED SPRAY PAINT.
9. ALL SOIL STACKS AND DRAINS SHALL RECEIVE NEW LEADS.
10. SEE DRAWINGS FOR ALL METAL FLASHING DETAILS AND COMPONENTS.

ROOF SECTION 1 & WEBB HALL: (SEE LABELED DETAIL AERIAL MAP)
MINERAL MODIFIED BITUMEN ROOF REPLACEMENT: (METAL DECK STRUCTURALLY SLOPED)

1. REMOVE EXISTING ROOF DOWN TO DECK AND DISPOSE OF ACCORDING TO ALL LOCAL AND STATE GUIDELINES.
2. MECHANICALLY ATTACH 2” RIGID POLYISOCYANURATE PER WIND UPLIFT FOUND IN DRAWING. INSTALL ¼-12 TAPERED POLYISOCYANURATE SET IN APPROVED INSULATION ADHESIVE PER WIND UP LIFT.
3. INSTALL ½” PRIMED DENS-DECK SET IN APPROVED INSULATION ADHESIVE PER WIND UP LIFT REQUIREMENTS.
4. INSTALL ½ -12 TAPERED CRICKETS AND SADDLES AS SHOWN ON DRAWINGS.
5. INSTALL MODIFIED SBS BASE SHEET SET IN COLD APPLIED ASPHALT AT 2.5 GAL PER SQUARE.
6. INSTALL MODIFIED MINERAL SBS CAP SHEET SET IN COLD APPLIED ASPHALT AT 2.5 GAL PER SQUARE AND HEAT WELD ALL FIELD AND FLASHING SEAMS.
7. FLASHINGS SHALL CONSIST OF:
   a. SBS MODIFIED BASE SHEET SET IN COLD APPLIED FLASHING ADHESIVE AT 5 GAL PER SQUARE.
   b. SBS MODIFIED MINERAL CAP SHEET SET IN COLD APPLIED FLASHING ADHESIVE AT 5 GAL PER SQUARE AND HEAT WELD ALL VERTICAL SEAMS.
   c. THREE-COURSE INSIDE AND OUTSIDE CORNERS OF CURBS AND WALLS WITH APPROVED FLASHING ADHESIVE AND MESH.
8. REPLACE CLAMPING RINGS AND STRAINERS ON DRAINS, MAKE SURE THEY ARE ALL PAINTED WITH RUSTOLEUM FIRE ENGINE RED SPRAY PAINT.
9. ALL SOIL STACKS AND DRAINS SHALL RECEIVE NEW LEADS.
10. SEE DRAWINGS FOR ALL METAL FLASHING DETAILS AND COMPONENTS.

LAKE LAND COLLEGE - NORTH WEST BUILDING & WEBB HALL
5001 LAKE LAND BLVD., MATTOON, IL 61938

PROJECT #: OSF_SJH1_2026 | ARCHITECT: | DATE: 10-19-26 | DWG BY: GCK | CHK BY: RB

REVISION:

The Garland Company, Inc
3800 EAST 91st STREET - CLEVELAND, OHIO 44105-2197
PHONE (800) 321-9336 / FAX (216) 641-0633

since 1895

NOTE:
CONTRACTOR SHALL FIELD VERIFY ALL DIMENSIONS, CONDITIONS AND QUANTITIES.

SYMBOL LEGEND

1. DRAIN, DTL B/5
2. PIPE PENETRATION, DTL K/7
3. SOIL STACK, DTL M/7
4. POWER VENT CURB, DTL H/6
5. BLOWER VENT CURB, DLT G/6
6. CAPPED CURB
7. HEAT STACK, DTL R/8
8. ROOF HATCH, DTL L/7
9. DEAD LOAD
10. SKYLIGHT, DTL F/6
11. PITCH POCKET, DTL Q/8
12. BLOWER VENT DUCT WORK
13. TERMINATION BAR
14. METAL COPING CAP, DTL C/5
15. SURFACE MOUNTED COUNTERFLASHING, N/8
16. REGLET MOUNTED COUNTERFLASHING, P/8
17. EXPANSION JOINT, DTL J/7
18. ELECTRICAL CONDUIT
19. METAL EDGE, DTL D/5

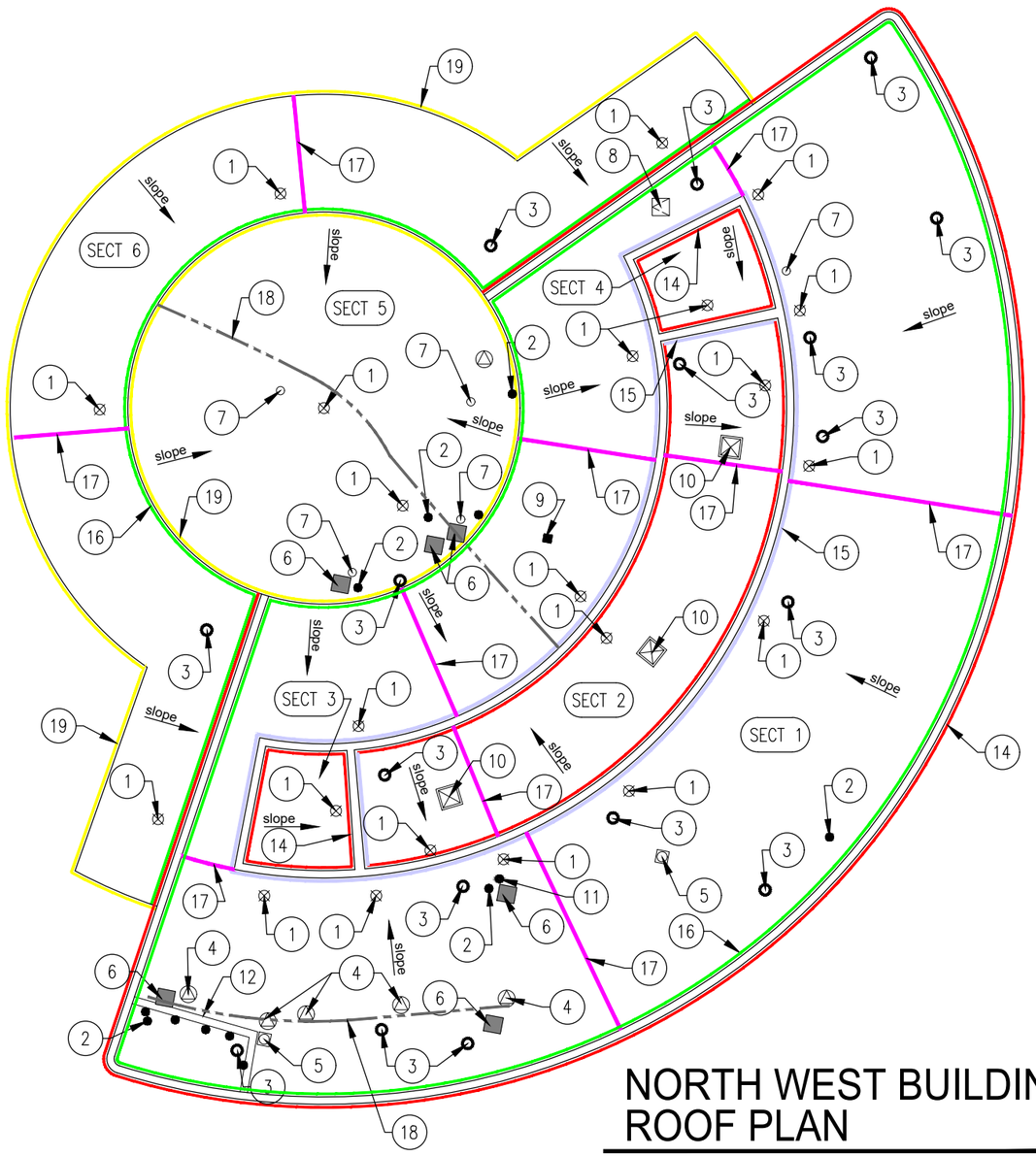

NORTH WEST BUILDING & WEBB HALL
ROOF PLAN

SCALE: 1" = 30'

LAKE LAND COLLEGE - NORTH WEST BUILDING & WEBB HALL
5001 LAKE LAND BLVD., MATTOON, IL 61938

PROJECT #: OSF_SJH1_2026 | ARCHITECT: | DATE: 10-19-26 | DWG BY: GCK | CHK BY: RB

REVISION:

The Garland Company, Inc
3800 EAST 91st STREET - CLEVELAND, OHIO 44105-2197
PHONE (800) 321-9336 / FAX (216) 641-0633

since 1895

SHEET: 3 OF 8

NOTE:
CONTRACTOR SHALL FIELD VERIFY ALL DIMENSIONS, CONDITIONS AND QUANTITIES.

SYMBOL LEGEND

1. DRAIN, DTL B/5
2. SOIL STACK, DTL M/7
3. REGLET MOUNTED COUNTERFLASHING, P/8
4. EXPANSION JOINT, DTL J/7
5. METAL EDGE, DTL D/5

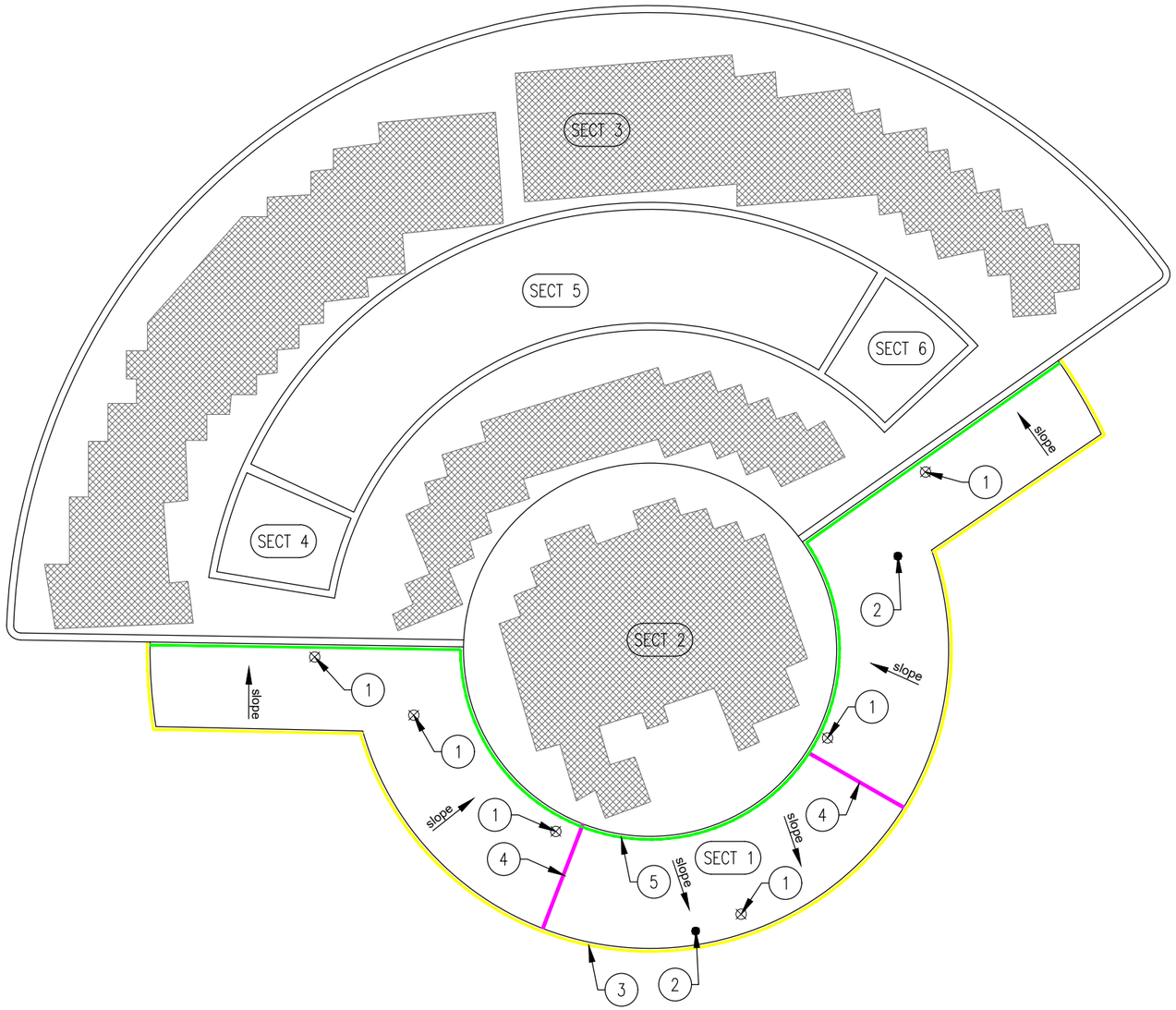

WEBB HALL ROOF PLAN

SCALE: 1" = 30'

LAKE LAND COLLEGE - NORTH WEST BUILDING & WEBB HALL
5001 LAKE LAND BLVD., MATTOON, IL 61938

PROJECT #: OSF_SJH1_2026 | ARCHITECT: | DATE: 10-19-26 | DWG BY: GCK | CHK BY: RB

REVISION:

The Garland Company, Inc
3800 EAST 91st STREET - CLEVELAND, OHIO 44105-2197
PHONE (800) 321-9336 / FAX (216) 641-0633

since 1895

SHEET: 4 OF 8

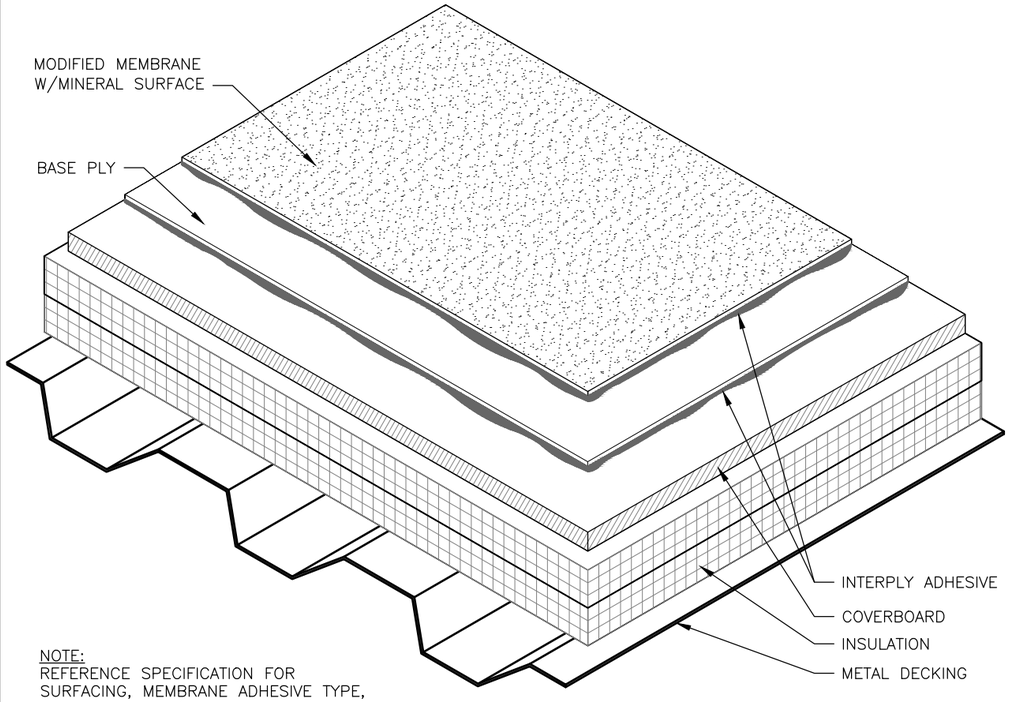

NOTE:
REFERENCE SPECIFICATION FOR SURFACING, MEMBRANE ADHESIVE TYPE, AND INSULATION/COVER BOARD TYPE AND ATTACHMENT METHOD.

A/5 TYPICAL ROOF SYSTEM MINERAL SURFACE

SCALE: 3" = 1'-0"

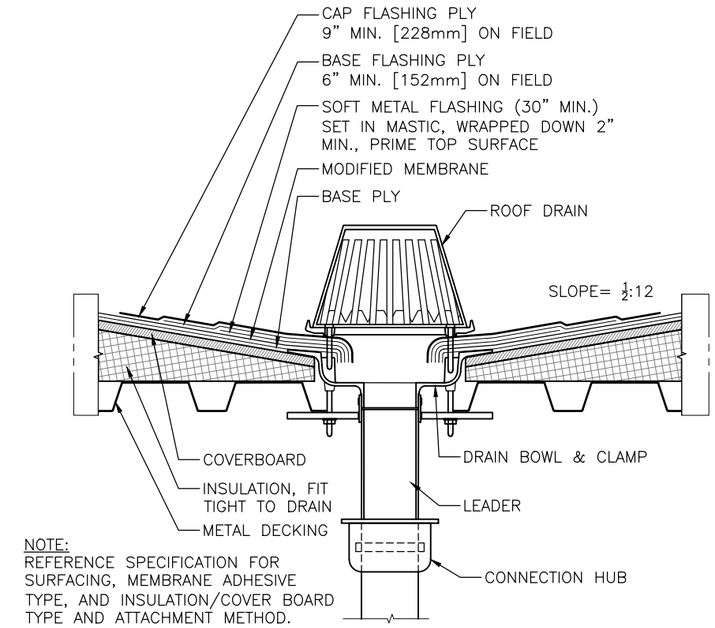

NOTE:
REFERENCE SPECIFICATION FOR SURFACING, MEMBRANE ADHESIVE TYPE, AND INSULATION/COVER BOARD TYPE AND ATTACHMENT METHOD.

B/5 ROOF DRAIN

SCALE: 1½" = 1'-0"

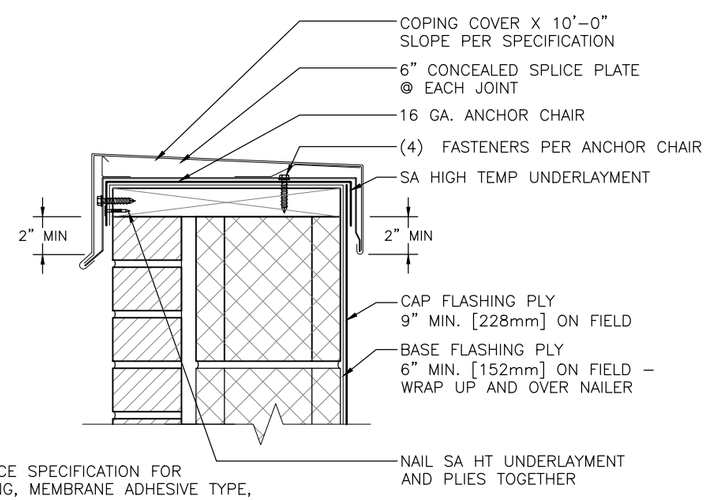

NOTE:
REFERENCE SPECIFICATION FOR SURFACING, MEMBRANE ADHESIVE TYPE, AND INSULATION/COVER BOARD TYPE AND ATTACHMENT METHOD.

C/5 COPING CAP AT MASONRY WALL

SCALE: 1½" = 1'-0"

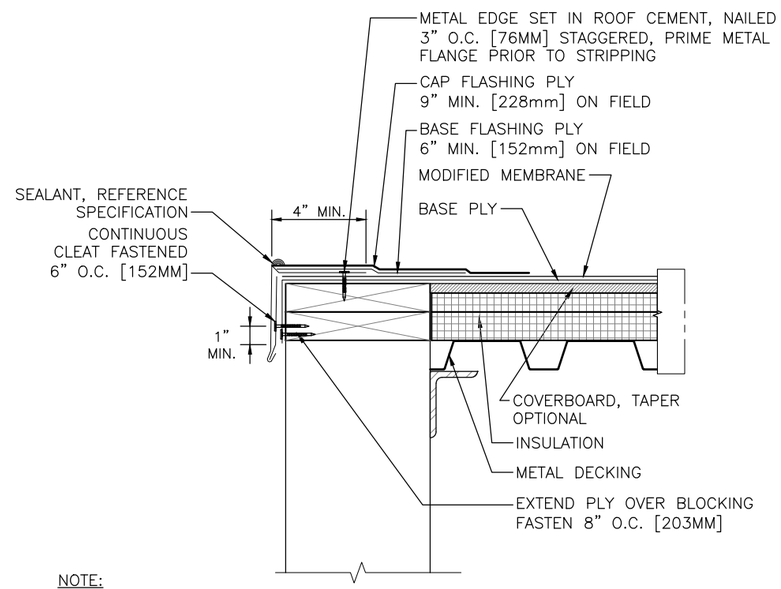

NOTE:
REFERENCE SPECIFICATION FOR SURFACING, MEMBRANE ADHESIVE TYPE, AND INSULATION/COVER BOARD TYPE AND ATTACHMENT METHOD.

D/5 METAL EDGE - DRIP EDGE

SCALE: 1½" = 1'-0"

LAKE LAND COLLEGE - NORTH WEST BUILDING & WEBB HALL
5001 LAKE LAND BLVD., MATTOON, IL 61938

PROJECT #: OSF_SJH1_2026 | ARCHITECT: | DATE: 10-19-26 | DWG BY: GCK | CHK BY: RB

REVISION:

The Garland Company, Inc
3800 EAST 91st STREET - CLEVELAND, OHIO 44105-2197
PHONE (800) 321-9336 / FAX (216) 641-0633

since 1895

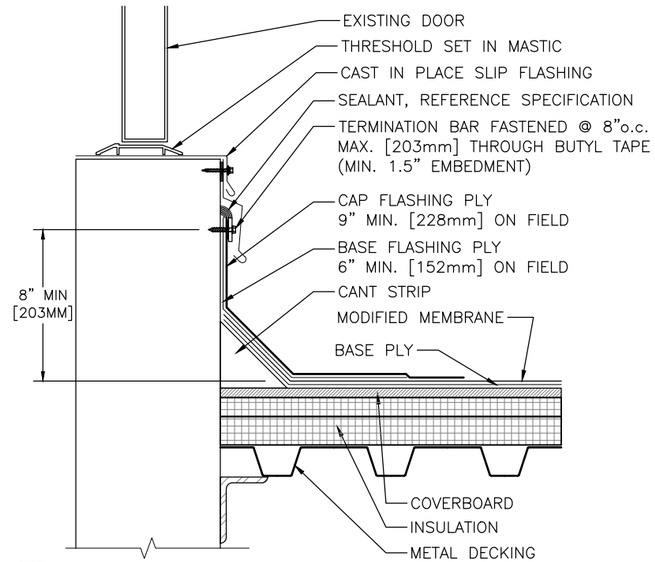

NOTE:
REFERENCE SPECIFICATION FOR SURFACING, MEMBRANE ADHESIVE TYPE, AND INSULATION/COVER BOARD TYPE AND ATTACHMENT METHOD.

E/6 DOOR THRESHOLD DETAIL
SCALE: 1½" = 1'-0"

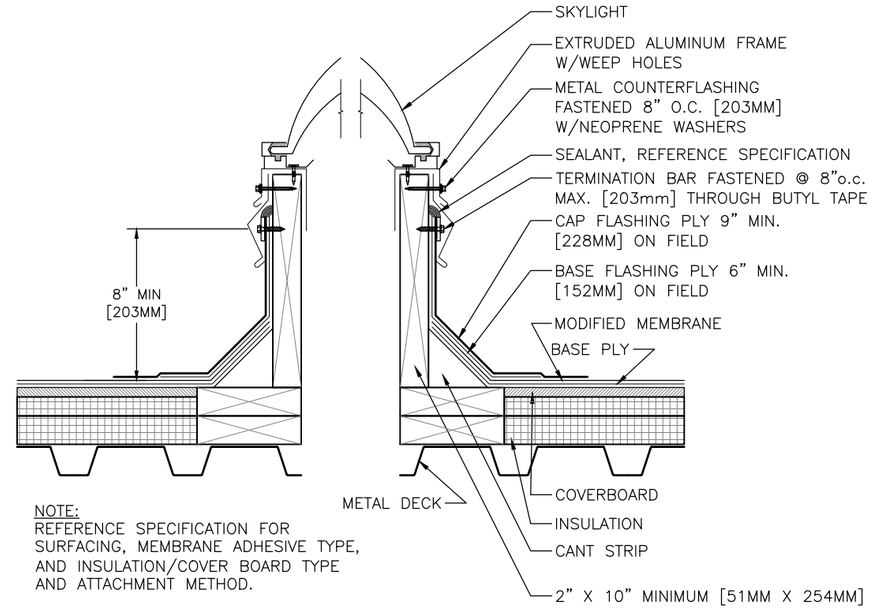

NOTE:
REFERENCE SPECIFICATION FOR SURFACING, MEMBRANE ADHESIVE TYPE, AND INSULATION/COVER BOARD TYPE AND ATTACHMENT METHOD.

F/6 SKYLIGHT
SCALE: 1½" = 1'-0"

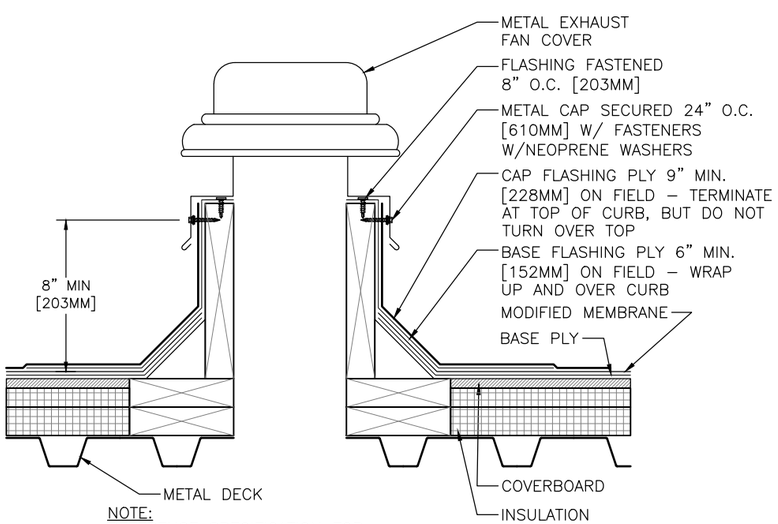

NOTE:
REFERENCE SPECIFICATION FOR SURFACING, MEMBRANE ADHESIVE TYPE, AND INSULATION/COVER BOARD TYPE AND ATTACHMENT METHOD.

G/6 EXHAUST FAN
SCALE: 1½" = 1'-0"

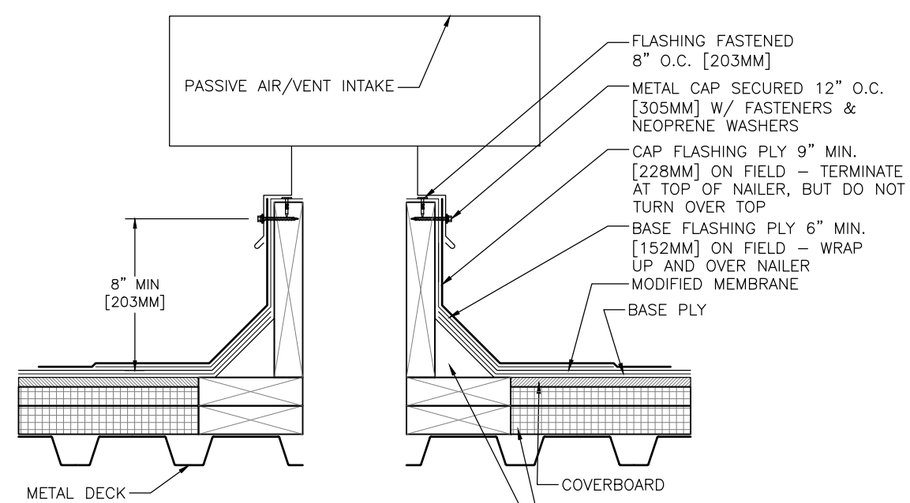

NOTE:
REFERENCE SPECIFICATION FOR SURFACING, MEMBRANE ADHESIVE TYPE, AND INSULATION/COVER BOARD TYPE AND ATTACHMENT METHOD.

H/6 PASSIVE AIR / VENT INTAKE
SCALE: 1½" = 1'-0"

LAKE LAND COLLEGE - NORTH WEST BUILDING & WEBB HALL
5001 LAKE LAND BLVD., MATTOON, IL 61938

PROJECT #: OSF_SJH1_2026 | ARCHITECT: | DATE: 10-19-26 | DWG BY: GCK | CHK BY: RB

REVISION:

The Garland Company, Inc
3800 EAST 91st STREET - CLEVELAND, OHIO 44105-2197
PHONE (800) 321-9336 / FAX (216) 641-0633

since 1895

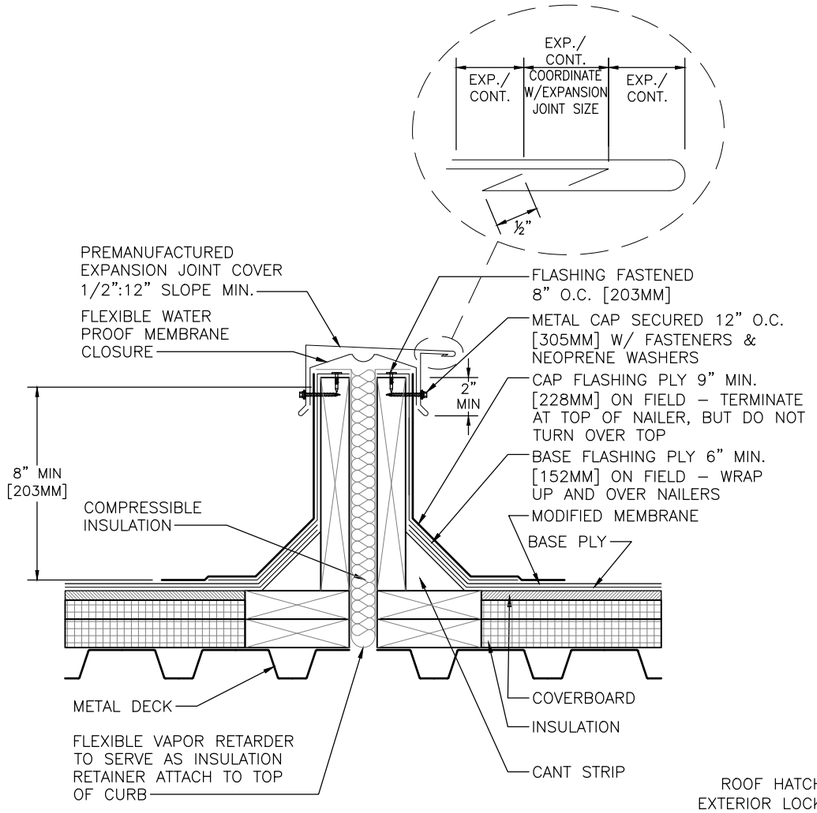

NOTE:
REFERENCE SPECIFICATION FOR SURFACING, MEMBRANE ADHESIVE TYPE, AND INSULATION/COVER BOARD TYPE AND ATTACHMENT METHOD.

J/7 EXPANSION JOINT
SCALE: 1½" = 1'-0"

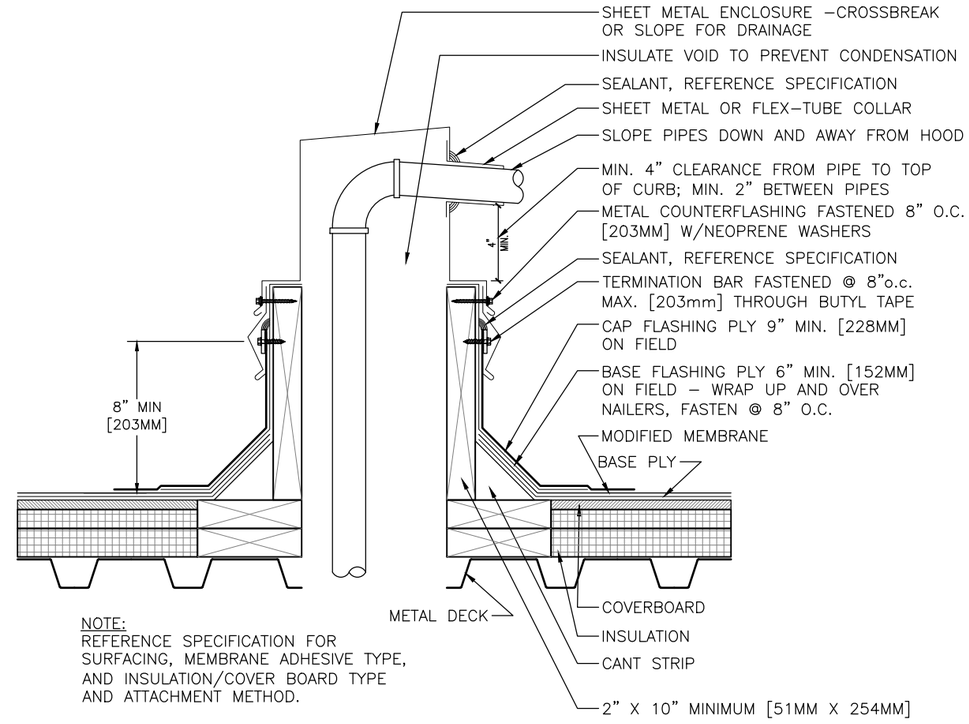

NOTE:
REFERENCE SPECIFICATION FOR SURFACING, MEMBRANE ADHESIVE TYPE, AND INSULATION/COVER BOARD TYPE AND ATTACHMENT METHOD.

K/7 PIPE HOUSING
SCALE: 1½" = 1'-0"

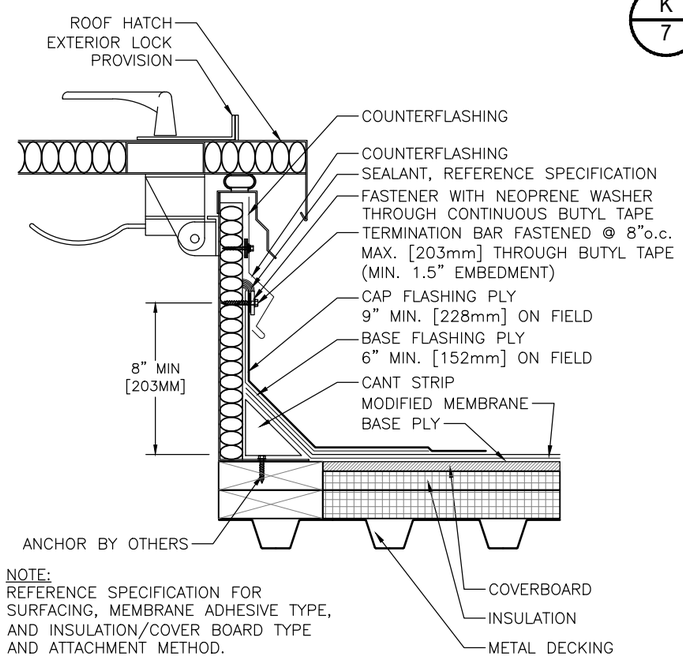

NOTE:
REFERENCE SPECIFICATION FOR SURFACING, MEMBRANE ADHESIVE TYPE, AND INSULATION/COVER BOARD TYPE AND ATTACHMENT METHOD.

L/7 HATCH DETAIL
SCALE: 1½" = 1'-0"

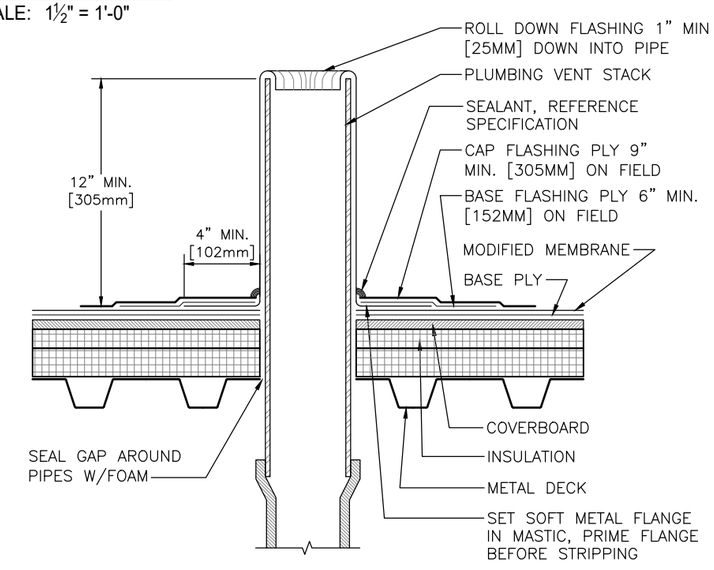

NOTE:
REFERENCE SPECIFICATION FOR SURFACING, MEMBRANE ADHESIVE TYPE, AND INSULATION/COVER BOARD TYPE AND ATTACHMENT METHOD.

M/7 PLUMBING STACK
SCALE: 1½" = 1'-0"

LAKE LAND COLLEGE - NORTH WEST BUILDING & WEBB HALL
5001 LAKE LAND BLVD., MATTOON, IL 61938

PROJECT #: OSF_SJH1_2026 | ARCHITECT: | DATE: 10-19-26 | DWG BY: GCK | CHK BY: RB

REVISION:

The Garland Company, Inc
3800 EAST 91st STREET - CLEVELAND, OHIO 44105-2197
PHONE (800) 321-9336 / FAX (216) 641-0633

since 1895

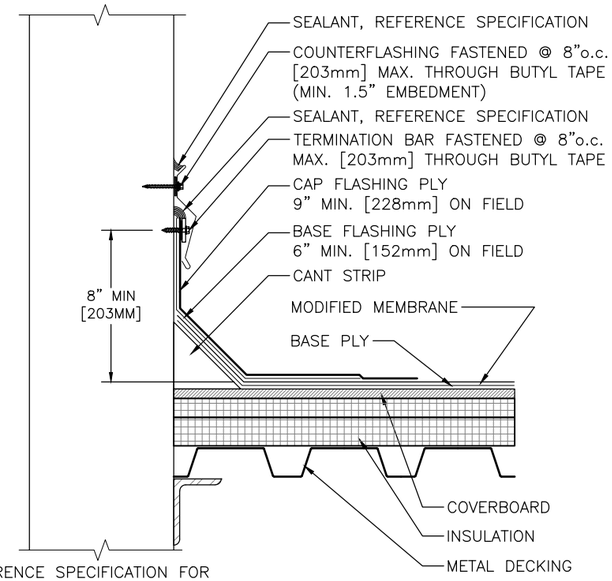

NOTE:
REFERENCE SPECIFICATION FOR SURFACING, MEMBRANE ADHESIVE TYPE, AND INSULATION/COVER BOARD TYPE AND ATTACHMENT METHOD.

N/8 WALL FLASHING - SURFACE MOUNTED COUNTERFLASHING

SCALE: 1½" = 1'-0"

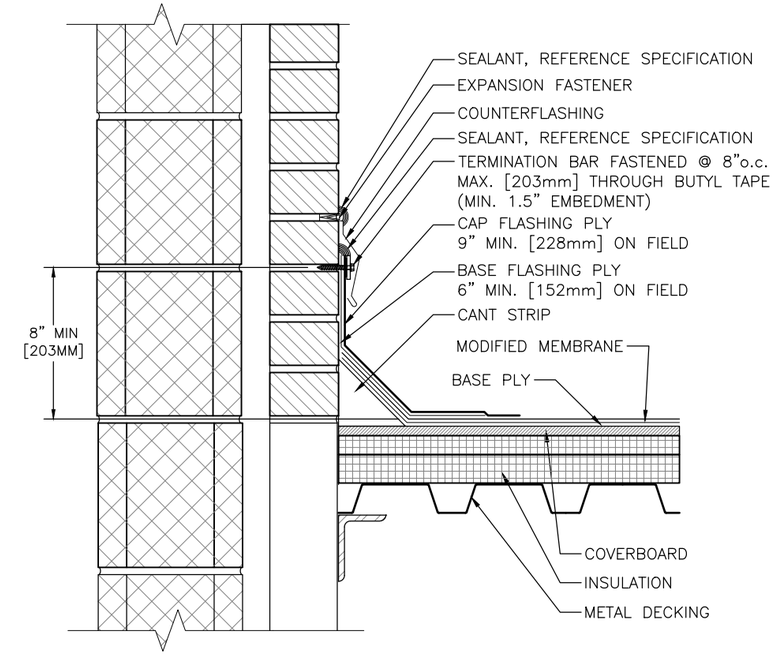

NOTE:
REFERENCE SPECIFICATION FOR SURFACING, MEMBRANE ADHESIVE TYPE, AND INSULATION/COVER BOARD TYPE AND ATTACHMENT METHOD.

P/8 WALL FLASHING - REGLET MOUNTED COUNTERFLASHING

SCALE: 1½" = 1'-0"

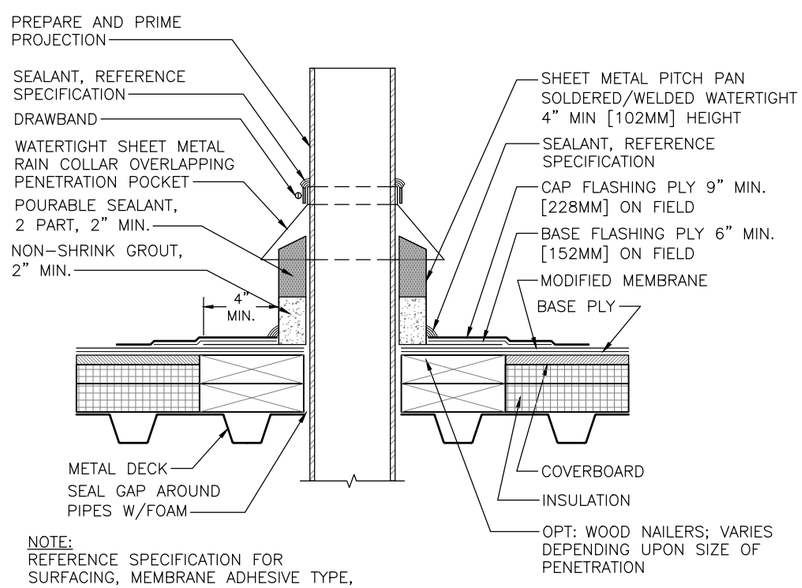

NOTE:
REFERENCE SPECIFICATION FOR SURFACING, MEMBRANE ADHESIVE TYPE, AND INSULATION/COVER BOARD TYPE AND ATTACHMENT METHOD.

Q/8 PITCH POCKET (PIPE)

SCALE: 1½" = 1'-0"

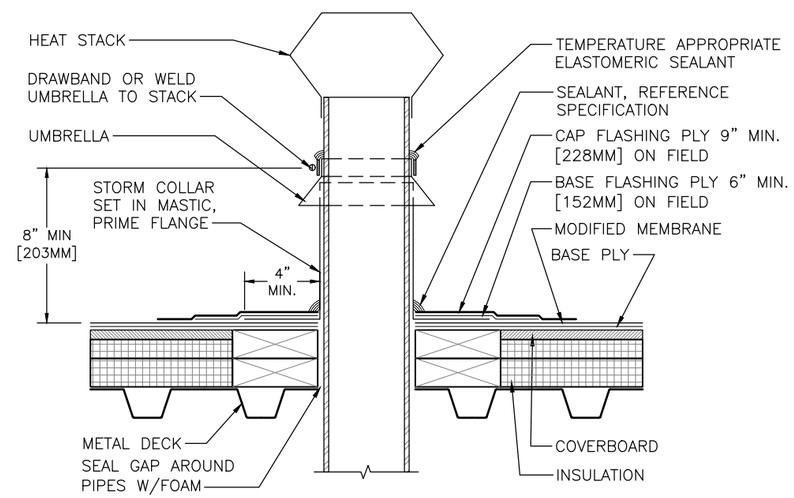

NOTE:
REFERENCE SPECIFICATION FOR SURFACING, MEMBRANE ADHESIVE TYPE, AND INSULATION/COVER BOARD TYPE AND ATTACHMENT METHOD.

R/8 HEAT STACK

SCALE: 1½" = 1'-0"

LAKE LAND COLLEGE - NORTH WEST BUILDING & WEBB HALL
5001 LAKE LAND BLVD., MATTOON, IL 61938

PROJECT #: OSF_SJH1_2026 | ARCHITECT: | DATE: 10-19-26 | DWG BY: GCK | CHK BY: RB

REVISION:

The Garland Company, Inc
3800 EAST 91st STREET - CLEVELAND, OHIO 44105-2197
PHONE (800) 321-9336 / FAX (216) 641-0633

since 1895